DATA SHEET

Type 2101

bürkert
FLUID CONTROL SYSTEMS

Pneumatically operated 2/2-way globe valve ELEMENT for decentralised automation

- Compact design
- Long service life
- Easy integration of automation units with ELEMENT
- Stainless steel valve body with flange, sleeve or welded connection
- Suitable for steam

Product variants described in the data sheet may differ from the product presentation and description.

Can be combined with

Type 8690
Pneumatic control for decentralised automation of ELEMENT process valves

Type 8691
Control head for decentralised automation of ELEMENT process valves

Type 8695
Control head for decentralised automation of ELEMENT process valves

Type 8697
Pneumatic control for decentralised automation of ELEMENT process valves

Type 8801
ELEMENT On/Off Valve Systems with decentralized automation - overview

Type 8840
Modular process valve cluster - distribution and collecting

Type description

The Type 2101 globe valve is specially optimised for decentralised process automation and meets all practical requirements even under difficult operating conditions. Its unique design allows easy the integration of automation units in all expansion stages, from electrical/optical position feedback to pneumatic control and integrated fieldbus interface. Maximum service life and tightness are achieved by the proven self-adjusting v-seal packing gland. The highly integrated system of valve and automation unit is characterised by its compact and smooth design, integrated pilot air ducts, protection classes IP65/67, NEMA Type 4X and high resistance to chemicals.

DTS 1000112108 EN Version: U Status: RL (released | freigegeben | validé) printed: 09.03.2023

บริษัท ฟลูเทค จำกัด
FLU-TECH CO.,LTD
845/3-4 หมู่ 3 ถ.เทพารักษ์ ต.เทพารักษ์ อ.เมือง จ.สมุทรปราการ 10270
845/3-4, Mhoo 3, Theparak Rd., T. Theparak, A. Muang, Samut Prakan, 10270, Thailand
Tel. 02 384 6060, Fax. 02 384 5701 Email sales@flutech.co.th , www.flutech.co.th

Table of contents

1. General technical data 3

2. Circuit functions 4

3. Approvals 5

4. Materials 6

4.1. Chemical Resistance Chart – Bürkert resistApp ... 6
4.2. Material specifications ... 6

5. Dimensions 7

5.1. Actuator ... 7
Valve system On/Off ELEMENT ... 8
5.2. Body with flange connection ... 9
5.3. Body with threaded connection ... 10
5.4. Body with welded connection ... 11
5.5. Body with clamp connection ... 12

6. Performance specifications 13

6.1. Fluidic data ... 13
Overview of fluidic data for flow direction below seat (for gases and liquids) ... 13
Pilot pressure diagram with flow direction below seat (Control function B) ... 14
Overview of fluidic data for flow direction above seat (for gases and steam) ... 15
Pilot pressure diagram for flow direction above seat (control function A) ... 15
6.2. Operating limits ... 16
Operating limits for medium temperature and operating pressure ... 16
Operating limits for ambient and medium temperature ... 17
Operating limits for optional versions ... 17

7. Product accessories 18

8. Networking and combination with other Bürkert products 19

9. Ordering information 20

9.1. Bürkert eShop – Easy ordering and quick delivery ... 20
9.2. Bürkert product filter ... 20
9.3. Ordering chart for flange connection ... 20
Valves with flow direction below seat ... 20
Valves with flow direction above seat ... 22

DTS 1000112108 EN Version: U Status: RL (released | freigegeben | validé) printed: 09.03.2023

WWW.FLUTECH.CO.TH SALES@FLUTECH.CO.TH + 66 (0) 2384-6060 + 66 (0) 2384-5701

1. General technical data

Product properties	
Dimensions	Detailed information can be found in chapter **"5. Dimensions" on page 7**.
Material	Detailed information can be found in chapter **"4. Materials" on page 6**.
Design	Globe valve
Nominal diameter	DN 10…DN 100, NPS ⅜…NPS 4
Safety setting in case of power failure	Normally closed (control function A), normally open (control function B)
Flow direction	Against closing direction (below seat), with closing direction (above seat)
Performance data	
Operating pressure	0 bar(g)…25 bar(g), vacuum version up to -0.9 bar (g) (option), see **"Operating limits for medium temperature and operating pressure" on page 16**
Nominal pressure	PN 25 (DIN EN 1333), Class 150 (DIN EN 1759)
Pilot pressure	2.5 bar(g)…10 bar(g), see **"6.1. Fluidic data" on page 13**
K_V value	4.7 m^3/h…140 m^3/h, see **"6.1. Fluidic data" on page 13**
Medium data	
Medium	Steam, water, neutral gases, alcohols, oils, fuels, hydraulic fluids, saline solutions, alkalis, organic solvents, fuel gases of category I, II and III acc. to Gas Appliances Regulation (EU) 2016/426 and oxygen
Medium temperature	-40 °C…230 °C, see **"6.2. Operating limits" on page 16**
Viscosity	Max. 600 mm^2/s
Control medium	Air, neutral gases
Process/Port connection & communication	
Port connection[1.)]	
Flange connection	DIN EN 1092-1 ANSI B16.5 JIS 10K
Threaded connection	G (DIN ISO 228-1) NPT (ASME B 1.20.1) Rc (ISO 7-1)
Welded connection	DIN EN ISO 1127 / ISO 4200 / DIN 11866 B DIN 11850 2 / DIN 11866 A ASME BPE / DIN 11866 C SMS 3008
Pilot air port	Push-in connector (external Ø 6 mm or ¼") or thread G ⅛" (on request)
Approvals and certificates	
Conformity	Food contact 1935/2004(EG), FDA Drinking water Pressure equipment directive Gas Appliances Ordinance Machinery Directive
Explosion proof	Explosion proof ATEX / IECex
Material certificate	2.2, 3.1
Environment and installation	
Ambient temperature	-10 °C…100 °C, see **"6.2. Operating limits" on page 16**
Degree of protection	IP65/67
Installation position	As required, preferably with actuator in upright position

DTS 1000112108 EN Version: U Status: RL (released | freigegeben | validé) printed: 09.03.2023

WWW.FLUTECH.CO.TH SALES@FLUTECH.CO.TH + 66 (0) 2384-6060 + 66 (0) 2384-5701

2. Circuit functions

⚠ CAUTION

Risk of damage due to bursting pipes and bursting equipment when the flow is above the seat.
In the case of liquid mediums, water hammer can occur causing pipes and the device to burst.

Do not use valves with flow above the seat for liquid mediums.

Control function (CF)	Description	
Flow direction below seat for fluids, steam and gases		
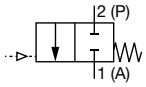	**CF: A, pneumatically operated on/off valve** 2/2-way Flow direction below seat Normally closed by spring force	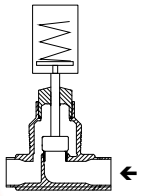
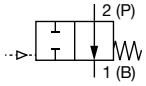	**CF: B, pneumatically operated on/off valve** 2/2-way Flow direction below seat Normally open by spring force	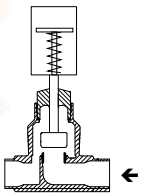
Flow direction above seat for steam and gases		
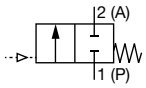	**CF: A, pneumatically operated on/off valve** 2/2-way Flow direction above seat Normally closed by spring force	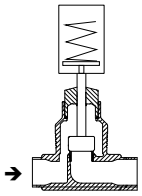

DTS 1000112108 EN Version: U Status: RL (released | freigegeben | validé) printed: 09.03.2023

WWW.FLUTECH.CO.TH SALES@FLUTECH.CO.TH + 66 (0) 2384-6060 + 66 (0) 2384-5701

3. Approvals

Approvals	Description
FDA	**Food contact** Materials in contact with the medium conform to FDA (option) Materials in contact with the medium conform to EC Regulation 1935/2004
H_2O	**Drinking water** Suitable for use with drinking water for medium temperatures up to 85 °C in accordance with the Drinking Water Ordinance §17 and the assessment principles of the Federal Environment Agency (option).
O_2	**Oxygen** Suitable for use with gaseous oxygen with medium temperature up to 60 °C and operating pressure up to 20 bar(g) (option)
	Explosion proof As category 2 device suitable for zone 1/21 and zone 2/22 (option) **ATEX**: II 2G Ex h IIC T4 Gb II 2D Ex h IIIC T135 °C Db **IECEx**: Ex h IIC T4 Gb Ex h IIIC T135 °C Db
	Fuel gases Approval according to the European Gas Appliance Regulation (EU) 2016/426, DVGW DIN EN 161 and DIN EN 16678, Class A or Class D, suitable for medium temperature 0…+160 °C, ambient temperature -10…+60 °C and operating pressure 0…16 bar(g) (option)
	Safety requirements Evaluation of functional safety according to IEC 61508 (on request)

DTS 1000112108 EN Version: U Status: RL (released | freigegeben | validé) printed: 09.03.2023

WWW.FLUTECH.CO.TH SALES@FLUTECH.CO.TH + 66 (0) 2384-6060 + 66 (0) 2384-5701

4. Materials

4.1. Chemical Resistance Chart – Bürkert resistApp

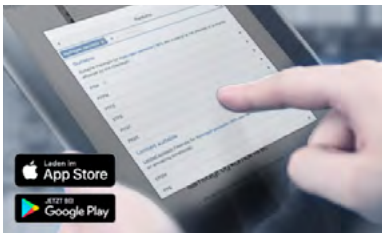

Bürkert resistApp – Chemical Resistance Chart

You want to ensure the reliability and durability of the materials in your individual application case? Verify your combination of media and materials on our website or in our resistApp.

Start Chemical Resistance Check

4.2. Material specifications

Note:
Lubricants for spindle packing and actuator are classified according NSF H1.

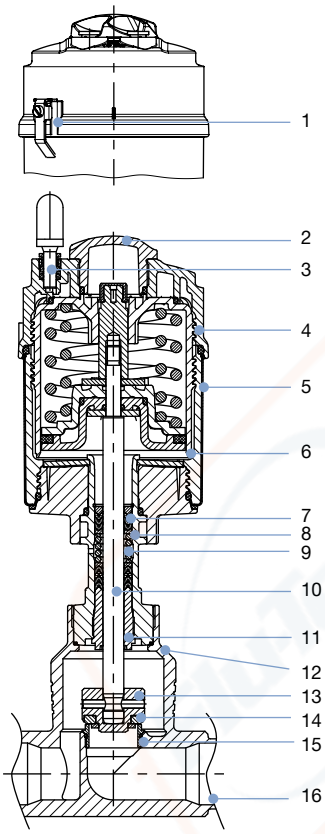

No.	Element	Material
1	Ground terminal	Stainless steel 1.4301/1.4305 only for ATEX version
2	Optical position indicator	Optical position indicator polysulfone PSU
3	Pilot air ports	Push-in connector PP (standard) On request: thread G ⅛" stainless steel 1.4305
4	Actuator	PPS
5	Cover	Stainless steel 1.4561 (316Ti)
6	Piston seal	FKM
7	Spring	Stainless steel 1.4310
8	Pipe	Stainless steel 1.4401 (316)/1.4404 (316L)
9	Spindle packing	PTFE V-Rings (filled), with spring compensation
10	Spindle	Stainless steel 1.4401 (316)/1.4404 (316L)
11	Spindle guide	DN 15 up to DN 65: PEEK DN 80 up to DN 100: 1.4401 (316)/1.4404 (316L)
12	Body seal	Graphite, PTFE (option)
13	Swivel plate	Stainless steel 1.4401 (316)/1.4404 (316L)
14	Seat seal	PTFE, PEEK (option)
15	Valve seat with O-ring	Stainless steel 1.4571, EPDM
16	Valve body	Stainless steel 316L / CF3M

DTS 1000112108 EN Version: U Status: RL (released | freigegeben | validé) printed: 09.03.2023

WWW.FLUTECH.CO.TH SALES@FLUTECH.CO.TH + 66 (0) 2384-6060 + 66 (0) 2384-5701

5. Dimensions

5.1. Actuator

Note:
Dimensions in mm, unless otherwise stated

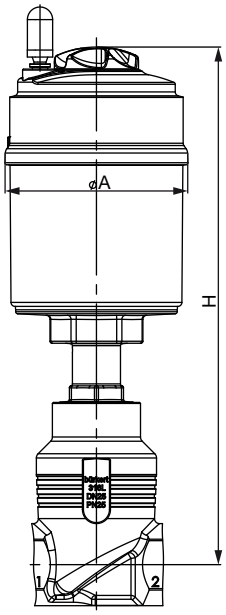

Nominal diameter (pipe)		Actuator size	Ø A	H
[mm]	NPS	[mm]		
10	⅜	50(D)	64.5	236
		70(M)	91	250
15	½	50(D)	64.5	236
		70(M)	91	250
20	¾	50(D)	64.5	242
		70(M)	91	256
25	1	50(D)	64.5	245
		70(M)	91	259
		90(N)	120	340
32	1¼	90(N)	120	340
		130(P)	159	392
40	1½	90(N)	120	345
		130(P)	159	397
50	2	90(N)	120	351
		130(P)	159	403
65	2½	130(P)	159	432
80	3	130(P)	159	465
100	4	130(P)	159	475

DTS 1000112108 EN Version: U Status: RL (released | freigegeben | validé) printed: 09.03.2023

WWW.FLUTECH.CO.TH SALES@FLUTECH.CO.TH + 66 (0) 2384-6060 + 66 (0) 2384-5701

Valve system On/Off ELEMENT

Note:

- For more information see "7. Product accessories" on page 18
- Dimensions in mm, unless otherwise stated

Control head

Type 8691

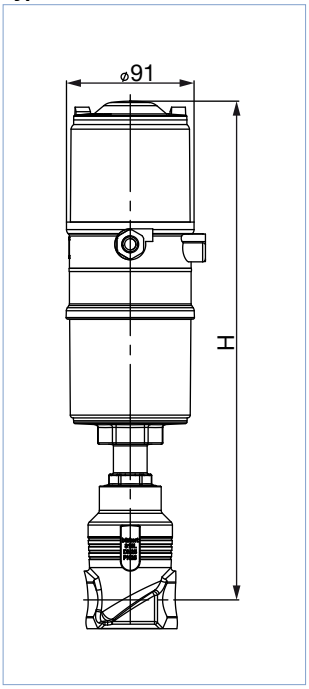

Type 8695

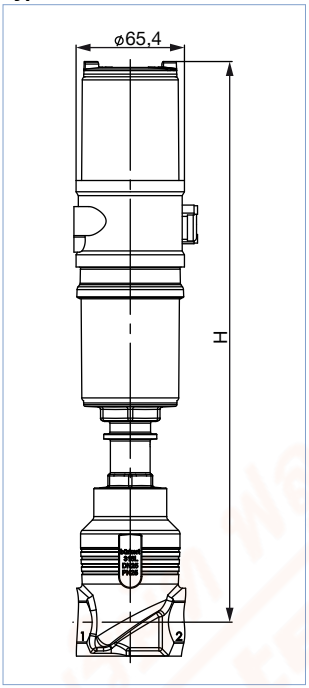

Nominal diameter (pipe)		Actuator size	8691 or 8695
[mm]	NPS	[mm]	
10	⅜	50(D)	330
		70(M)	347
15	½	50(D)	330
		70(M)	347
20	¾	50(D)	336
		70(M)	353
25	1	50(D)	339
		70(M)	356
		90(N)	437
32	1¼	90(N)	437
		130(P)	489
40	1½	90(N)	442
		130(P)	494
50	2	90(N)	448
		130(P)	500
65	2½	130(P)	529
80	3	130(P)	562
100	4	130(P)	572

Pneumatic control units/position feedback

Type 8690

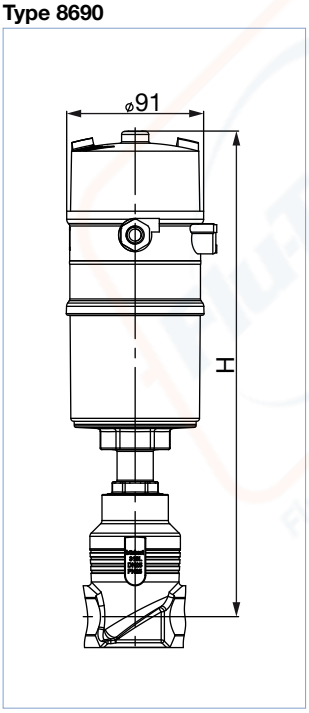

Type 8697

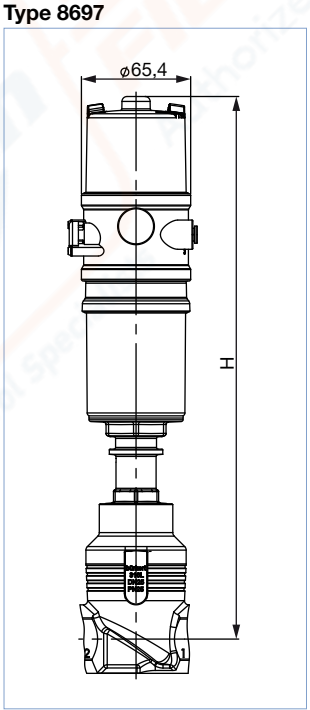

Nominal diameter (pipe)		Actuator size	8690 or 8697
[mm]	NPS	[mm]	
10	⅜	50(D)	316
		70(M)	314
15	½	50(D)	316
		70(M)	314
20	¾	50(D)	322
		70(M)	320
25	1	50(D)	325
		70(M)	323
		90(N)	404
32	1¼	90(N)	404
		130(P)	456
40	1½	90(N)	409
		130(P)	461
50	2	90(N)	415
		130(P)	467
65	2½	130(P)	496
80	3	130(P)	529
100	4	130(P)	539

DTS 1000112108 EN Version: U Status: RL (released | freigegeben | validé) printed: 09.03.2023

WWW.FLUTECH.CO.TH SALES@FLUTECH.CO.TH + 66 (0) 2384-6060 + 66 (0) 2384-5701

5.2. Body with flange connection

Note:
Dimensions in mm, unless otherwise stated

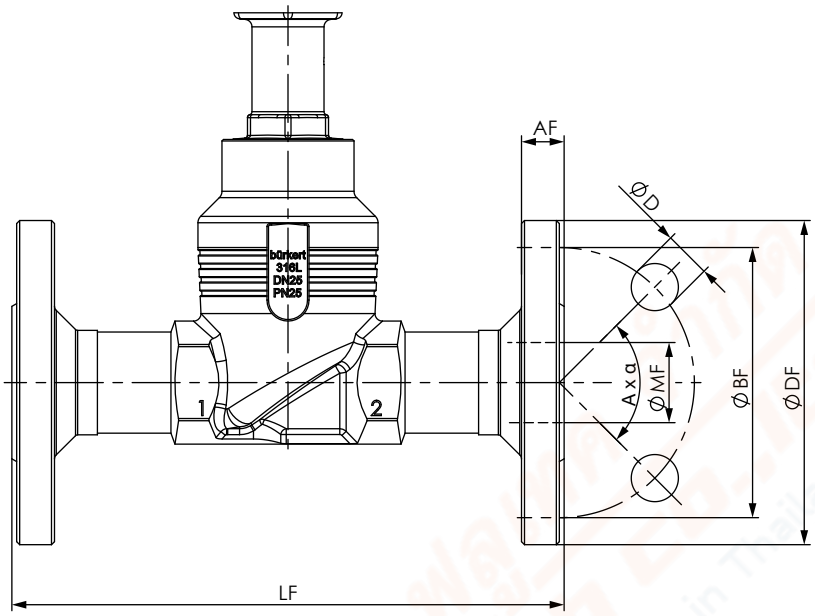

Nominal diameter (pipe)	DIN EN 1092 PN 25 FTF 1 acc. to DIN EN 558-1							JIS 10K FTF 10 acc. to DIN EN 558-2						
DN	**Ø DF**	**LF**	**Ø BF**	**AF**	**Ø D**	**A x α**	**Ø MF**	**Ø DF**	**LF**	**Ø BF**	**AF**	**Ø D**	**A x α**	**Ø MF**
10	90	130	60	16	14	4 x 90°	13.6	–	–	–	–	–	–	–
15	95	130	65	16	14	4 x 90°	18.1	95	108	70	12	15	4 x 90°	18.1
20	105	150	75	18	14	4 x 90°	23.7	100	117	75	14	15	4 x 90°	23.7
25	115	160	85	18	14	4 x 90°	29.7	125	127	90	14	19	4 x 90°	29.7
32	140	180	100	18	18	4 x 90°	38.4	135	140	100	16	19	4 x 90°	38.4
40	150	200	110	18	18	4 x 90°	44.3	140	165	105	16	19	4 x 90°	44.3
50	165	230	125	20	18	4 x 90°	56.3	155	203	120	16	19	4 x 90°	56.3
65	185	290	145	22	18	8 x 45°	66.0	175	216	140	18	19	4 x 90°	71.5
80	200	310	160	24	18	8 x 45°	81.0	185	241	150	18	19	8 x 45°	84.3
100	235	350	190	24	22	8 x 45°	100.0	292	292	175	18	19	8 x 45°	109.1

Nominal diameter (pipe)	ANSI B 16.5 Class 150 FTF 37 acc. to DIN EN 558-2						
NPS	**Ø DF**	**LF**	**Ø BF**	**AF**	**Ø D**	**A x α**	**Ø MF**
½	89	184	60.5	11.2	15.7	4 x 90°	15.7
¾	99	184	69.9	12.7	15.7	4 x 90°	20.8
1	108	184	79.2	14.2	15.7	4 x 90°	26.7
1½	127	222	98.6	17.5	15.7	4 x 90°	40.9
2	152	254	120.7	19.1	19.1	4 x 90°	52.6
2½	178	276	139.7	22.3	19.1	4 x 90°	62.7
3	190	298	152.5	23.9	19.1	4 x 90°	78.0
4	229	352	190.5	23.9	19.1	8 x 45°	102.4

DTS 1000112108 EN Version: U Status: RL (released | freigegeben | validé) printed: 09.03.2023

WWW.FLUTECH.CO.TH SALES@FLUTECH.CO.TH + 66 (0) 2384-6060 + 66 (0) 2384-5701

5.3. Body with threaded connection

Note:
Dimensions in mm, unless otherwise stated

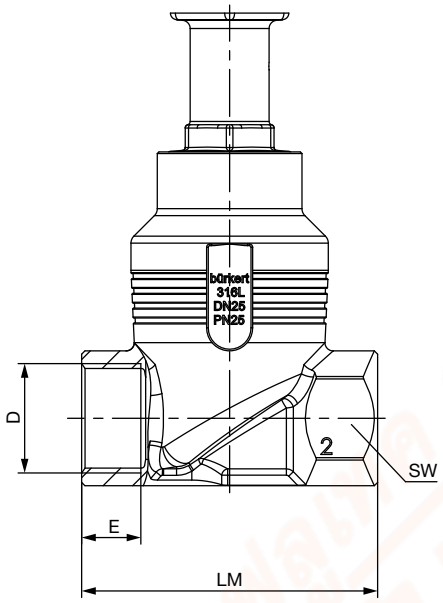

Nominal diameter (pipe)	G, Rc, NPT (EN ISO 228-1, ISO 7/1/DIN EN 10226-2, ASME B 1.20.1)					
	D	E			LM	SW
DN	NPS	G	NPT	Rc		
10	⅜	12	10.3	10.1	65	27
15	½	14	13.7	13.2	65	27
20	¾	16	14	14.5	75	34
25	1	18	16.8	16.8	90	41
32	1¼	20	17.3	19.1	110	50
40	1½	22	17.3	19.1	120	55
50	2	24	17.6	23.4	150	70
65	2½	26	23.7	26.7	185	85
80	3	28	30.5	29.8	205	100
100	4	32	33	35.8	240	125

DTS 1000112108 EN Version: U Status: RL (released | freigegeben | validé) printed: 09.03.2023

WWW.FLUTECH.CO.TH SALES@FLUTECH.CO.TH + 66 (0) 2384-6060 + 66 (0) 2384-5701

5.4. Body with welded connection

Note:
Dimensions in mm, unless otherwise stated

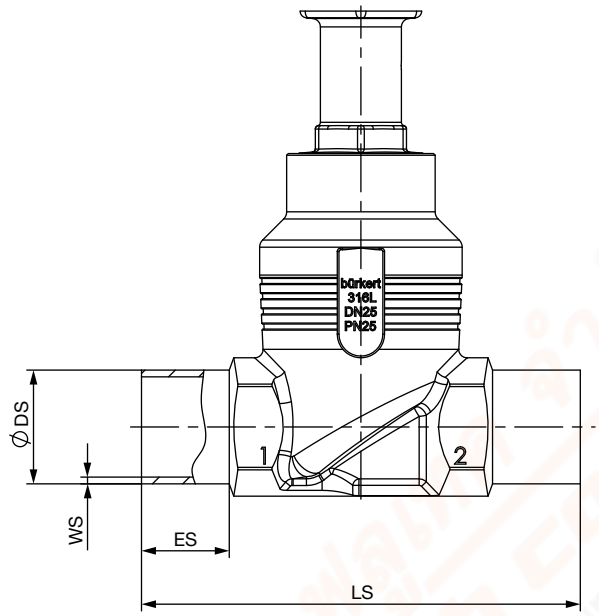

Nominal diameter (pipe)	ES	LS	EN ISO 1127 1/ISO 4200/DIN 11866 B		DIN 11850 2/DIN 11866 A/DIN EN 10357 A	
DN			Ø DS	WS	Ø DS	WS
10	20	90	17.2	1.6	13	1.5
15	20	90	21.3	1.6	19	1.5
20	20	100	26.9	1.6	23	1.5
25	26	130	33.7	2.0	29	1.5
32	26	140	42.4	2.0	35	1.5
40	26	150	48.3	2.0	41	1.5
50	26	175	60.3	2.0	53	1.5
65	26	210	76.1	2.3	70	2.0
80	26	230	88.9	2.3	85	2.0
100	26	260	114.3	2.6	104	2.0

Nominal diameter (pipe)	ES	LS	ASME BPE/DIN 11866 C	
NPS			Ø DS	WS
½	20	90	12.7	1.65
¾	20	90	19.05	1.65
1	20	100	25.4	1.65
1½	26	140	38.1	1.65
2	26	150	50.8	1.65
2½	26	175	63.5	1.65
3	26	210	76.2	1.65
4	26	260	101.6	2.11

DTS 1000112108 EN Version: U Status: RL (released | freigegeben | validé) printed: 09.03.2023

WWW.FLUTECH.CO.TH SALES@FLUTECH.CO.TH + 66 (0) 2384-6060 + 66 (0) 2384-5701

5.5. Body with clamp connection

Note:
Dimensions in mm, unless otherwise stated

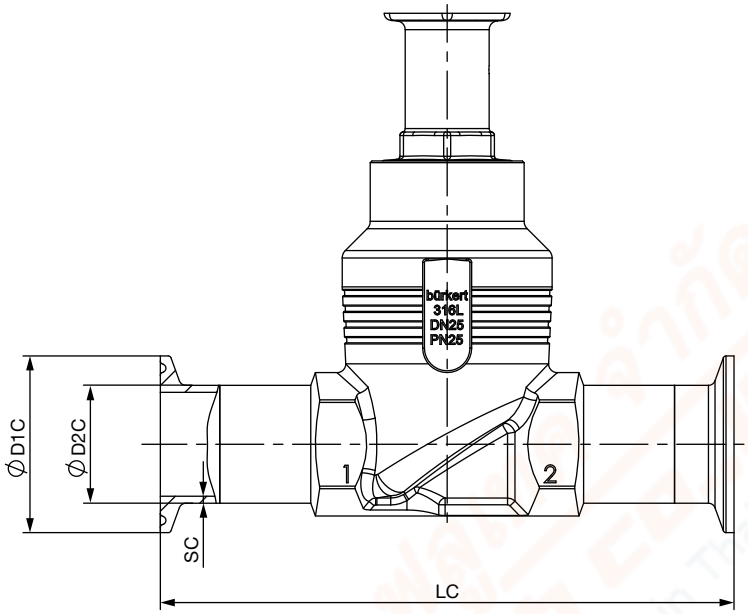

Nominal diameter (pipe)	Clamp: DIN 32676 A Pipe: DIN 11850 2 DIN 11866 A DIN EN 10357 A				Clamp: DIN 32676 B Pipe: EN ISO 1127 1 ISO 4200 DIN 11866 B			
DN	**LC**	**Ø D2 C**	**Ø D1 C**	**SC**	**LC**	**Ø D2 C**	**Ø D1 C**	**SC**
15	126	19	34	1.5	146	21.3	50.5	1.6
20	136	23	34	1.5	136	26.9	50.5	1.6
25	173	29	50.5	1.5	164	33.7	50.5	2.0
40	193	41	50.5	1.5	193	48.3	64.0	2.0
50	218	53	64	1.5	218	60.3	77.5	2.0

Nominal diameter (pipe)	Clamp: ASME BPE DIN 32676 C Pipe: ASME BPE DIN 11866 C			
NPS	**LC**	**Ø D2 C**	**Ø D1 C**	**SC**
½	122	12.7	25.0	1.65
¾	126	19.05	25.0	1.65
1	126	25.4	50.5	1.65
1½	172	38.1	50.5	1.65
2	182	50.8	64.0	1.65
2½	231	63.5	77.5	1.65
3	265	76.2	91.0	1.65
4	315	101.6	119.0	2.11

DTS 1000112108 EN Version: U Status: RL (released | freigegeben | validé) printed: 09.03.2023

WWW.FLUTECH.CO.TH SALES@FLUTECH.CO.TH + 66 (0) 2384-6060 + 66 (0) 2384-5701

6. Performance specifications

6.1. Fluidic data

Overview of fluidic data for flow direction below seat (for gases and liquids)

Note:

- K_V value water [m³/h]: Measured with water at +20 °C, 1 bar pressure at valve inlet and free outlet
- Pressure data [bar]: Overpressure to atmospheric pressure

Nominal diameter		Actuator size	K_V value	Pilot pressure min.	Operating pressure max. [bar(g)]		
					CF: A		CF: B
					Sitzdichtung		
DN	NPS	[mm]	[m³/h]	CF: A [bar(g)]	PTFE	PEEK	PTFE
10	⅜	50(D)	4.7	5.2	25	25	25
		70(M)	4.7	4.8	25	25	25
15	½	50(D)	4.7	5.2	25	25	25
		70(M)	4.7	4.8	25	25	25
20	¾	50(D)	8.1	5.2	16	13.5	25
		70(M)	8.1	4.8	25	25	25
25	1	50(D)	13	5.2	9	–	25
		70(M)	13	4.8	16	13.5	25
		90(N)	13	5	25	25	25
32	1¼	70(M)	20	4.8	8.5	–	25
		90(N)	20	5	25	19.5	25
		130(P)	20	5	25	25	–
40	1½	70(M)	31	4.8	6	–	25
		90(N)	31	5	16	13.5	25
		130(P)	31	5	25	25	25
50	2	90(N)	45	5	10	–	25
		130(P)	45	5	25 (20[1.)])	23 (20[1.)])	25 (20[1.)])
65	2½	90(N)	73	5	5	–	14
		130(P)	73	5.6	16 (15[1.)])	12.5	16 (15[1.)])
80	3	130(P)	110	5.6	10	8	11
100	4	130(P)	165	5.6	6	5	7

1.) According to pressure equipment directive 2014/68/EU for compressible fluids of group 1 (dangerous gases and vapours according to article 4, paragraph (1), c), i), first indent)

DTS 1000112108 EN Version: U Status: RL (released | freigegeben | validé) printed: 09.03.2023

WWW.FLUTECH.CO.TH SALES@FLUTECH.CO.TH + 66 (0) 2384-6060 + 66 (0) 2384-5701

Pilot pressure diagram with flow direction below seat (Control function B)

Actuator size: Ø50

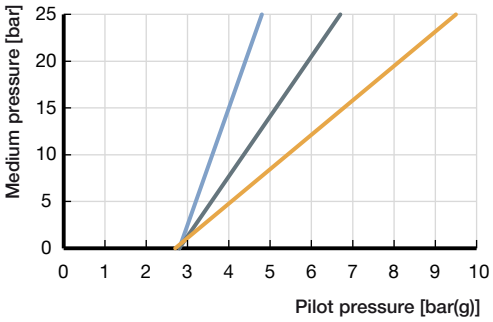

Orifice:
- DN15
- DN20
- DN25

Actuator size: Ø70

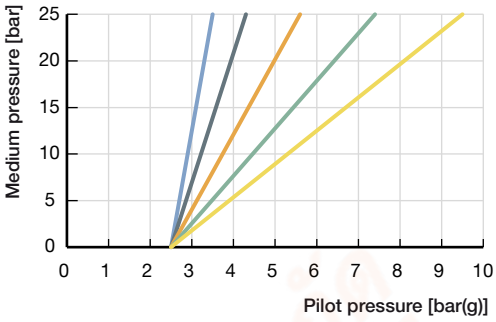

Orifice:
- DN15
- DN20
- DN25
- DN32
- DN40

Actuator size: Ø90

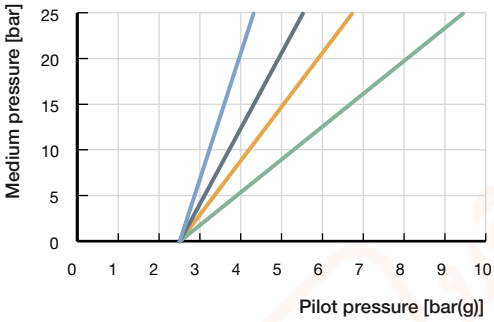

Orifice:
- DN25
- DN32
- DN40
- DN50

Actuator size: Ø130

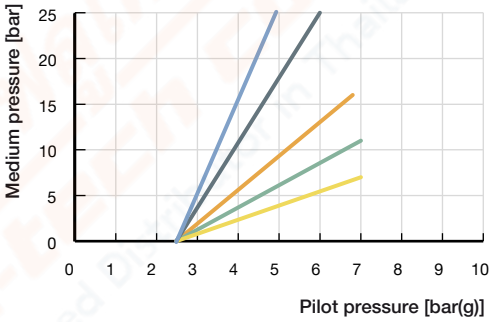

Orifice:
- DN40
- DN50
- DN65
- DN80
- DN100

DTS 1000112108 EN Version: U Status: RL (released | freigegeben | validé) printed: 09.03.2023

WWW.FLUTECH.CO.TH SALES@FLUTECH.CO.TH + 66 (0) 2384-6060 + 66 (0) 2384-5701

Overview of fluidic data for flow direction above seat (for gases and steam)

⚠ CAUTION

Risk of damage due to bursting pipes and bursting equipment when the flow is above the seat.
In the case of liquid mediums, water hammer can occur causing pipes and the device to burst.

Do not use valves with flow above the seat for liquid mediums..

Note:

- K_V value water [m³/h]: Measured with water at +20 °C, 1 bar pressure at valve inlet and free outlet
- Pressure data [bar]: Overpressure to atmospheric pressure

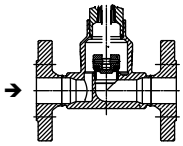

Nominal diameter		Actuator size	K_V value	Operating pressure max. CF: A
DN	NPS	[mm]	[m³/h]	[bar(g)]
15	½	50(D)	4.7	16
		70(M)	4.7	16
20	¾	50(D)	8.1	16
		70(M)	8.1	16
25	1	50(D)	13	16
		70(M)	13	16
32	1¼	70(M)	19.5	16
40	1½	70(M)	31	16
		90(N)	31	16
50	2	70(M)	45	12
		90(N)	45	16

Pilot pressure diagram for flow direction above seat (control function A)

Actuator size: Ø50

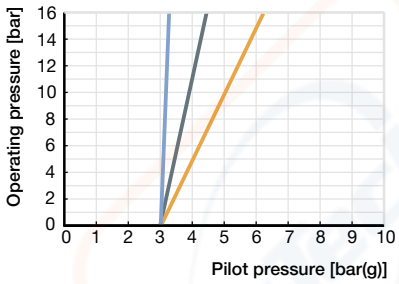

Orifice:
DN15
DN20
DN25

Actuator size: Ø70

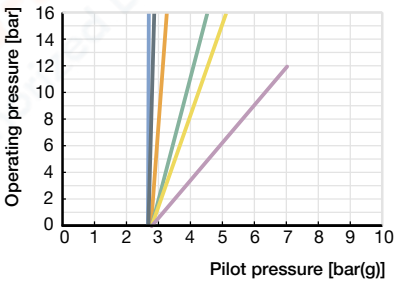

Orifice:
DN15
DN20
DN25
DN32
DN40
DN50

Actuator size: Ø90

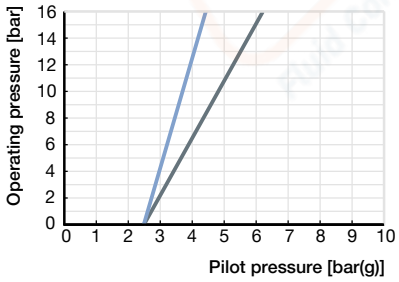

Orifice:
DN40
DN50

DTS 1000112108 EN Version: U Status: RL (released | freigegeben | validé) printed: 09.03.2023

WWW.FLUTECH.CO.TH SALES@FLUTECH.CO.TH + 66 (0) 2384-6060 + 66 (0) 2384-5701

6.2. Operating limits

Operating limits for medium temperature and operating pressure

The operating range of Bürkert process valves is in addition to the maximum operating pressures limited by the nominal pressure according to the relevant standard.

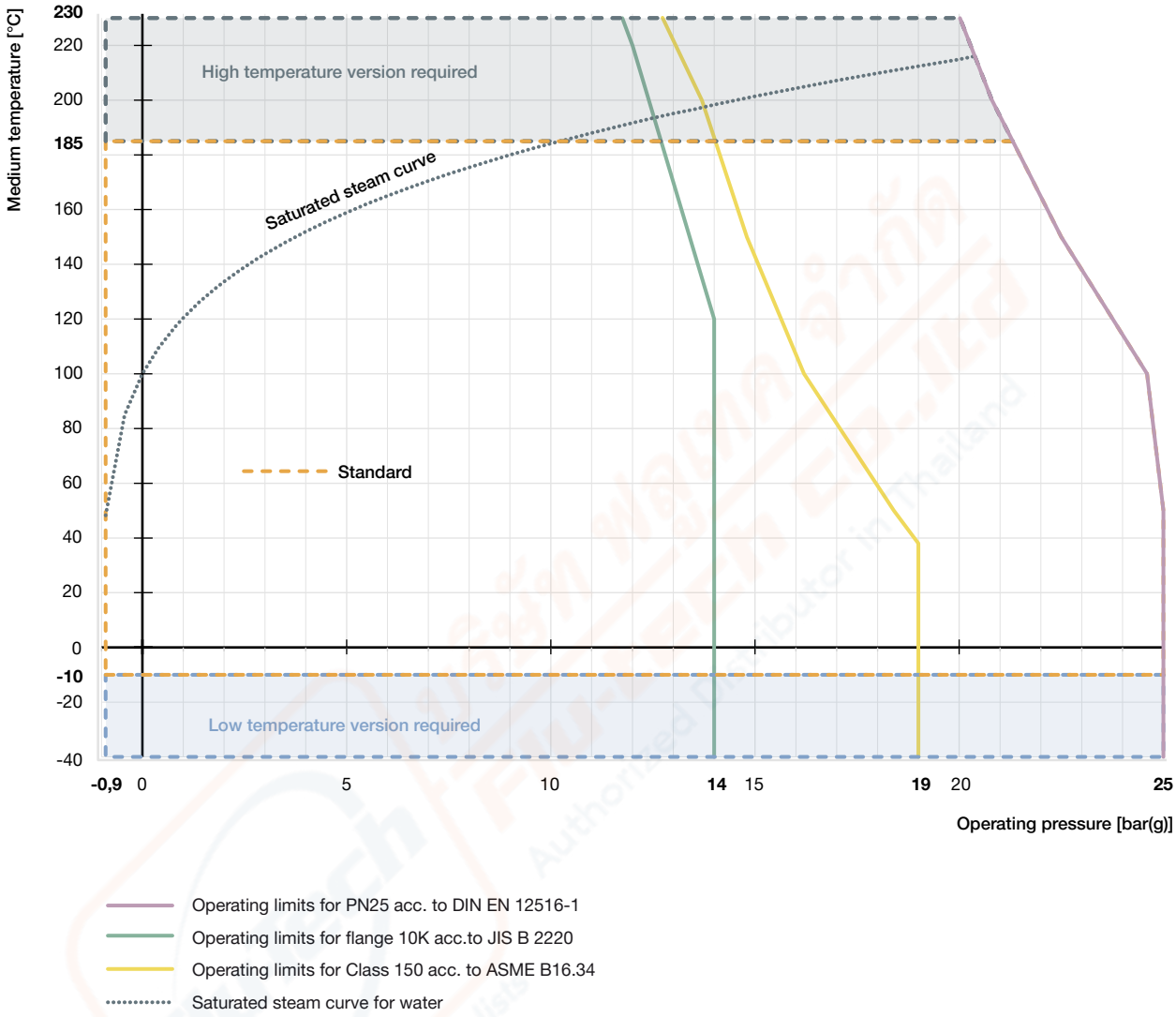

DTS 1000112108 EN Version: U Status: RL (released | freigegeben | validé) printed: 09.03.2023

WWW.FLUTECH.CO.TH SALES@FLUTECH.CO.TH + 66 (0) 2384-6060 + 66 (0) 2384-5701

Operating limits for ambient and medium temperature

ELEMENT On/Off valve

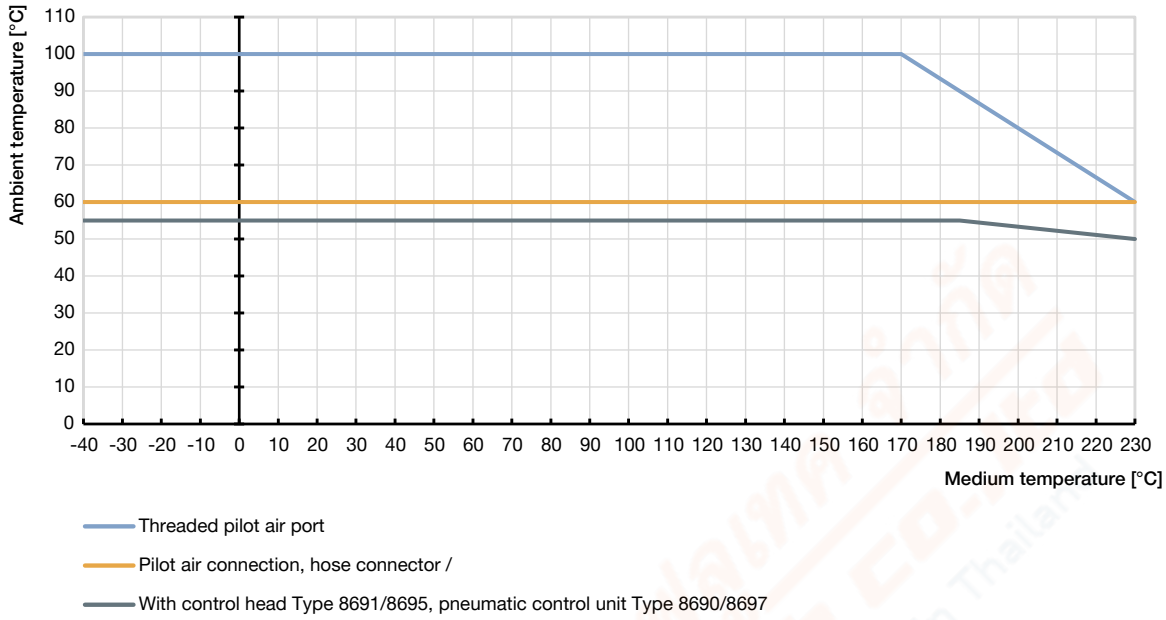

Operating limits for optional versions

High temperature version
By adjusting the spindle seal, this version is suitable for applications with steam, neutral gases and other heat transfer media up to 230 °C.

Hot water version
For applications with hot water up to 200 °C, a special configuration of the spindle seal increases significantly the service life. It is recommended for use from water temperatures as low as 85 °C.

Drinking water version
Materials in contact with the medium are tested for suitability with drinking water up to 85 °C.

Vacuum version
Without leakage bore, this design is suitable down to -0.9 bar(g).

Low temperature version
Suitable for minimum medium temperatures down to -40 °C

Version for oxygen
Non-metallic wetted materials are tested for suitability with oxygen and suitable for operating pressures up to 25 bar(g) and medium temperatures up to 60 °C.
.

DTS 1000112108 EN Version: U Status: RL (released | freigegeben | validé) printed: 09.03.2023

WWW.FLUTECH.CO.TH SALES@FLUTECH.CO.TH + 66 (0) 2384-6060 + 66 (0) 2384-5701

7. Product accessories

Control head	
Type 8691 ▸ **Actuator size Ø 70/90/130 mm**	**Description**
	The control heads, Type 8691 and 8695, are optimized for integrated mounting on process valves of the 21XX series. The valve position is detected without contact via an analogue sensor element, which automatically detects and stores the valve end positions during commissioning using the Teach-In function. The integrated pilot valve controls single or double-acting actuators. The switching status of the valve is indicated by coloured high-performance LEDs. **Features** • Status indication via coloured high-power LEDs • Non-wearing inductive position sensor • Pilot valve with manual override • Teach-In function for automatic recognition of the valve end positions • Hygienic stainless steel design • Easy to clean chemical resistant housing according to IP65/67, 4X rating • AS-Interface, IO-Link, Bürkert system bus (büS) **Customer benefits** • Simple and safe commissioning by means of Teach-In function • Easy process monitoring and fault detection through visible coloured high-power LEDs • High degree of system availability due to increased actuator service life by means of spring chamber ventilation • Minimal space requirement in the plant piping for more flexibility in plant design
Type 8695 ▸ **Actuator size Ø 50 mm**	

Pneumatic Control unit/Position feedback	
Type 8690 ▸ **Actuator size Ø 70/90/130 mm**	**Description**
	The pneumatic control units, Type 8690 and 8697, are optimized for integrated mounting on process valves of the 21XX series. Mechanical or inductive limit switches detect the valve position. The integrated pilot valve controls single or double-acting (Type 8690) actuators. **Features** • Optical position indicator • Mechanical or inductive proximity switches for end position detection • Pilot valve with manual override • Compact design • Easy to clean, chemical resistant housing according to IP65/67, 4X rating • Optional intrinsically safe design according to ATEX/IECEx **Customer benefits** • Simple and safe commissioning using the Teach-In function (Type 8697) • Signal reliability due to the automatic adjustment of the limit position switches • Minimal space requirement in the plant piping for more flexibility in plant design
Type 8697 ▸ **Actuator size Ø 50 mm**	

DTS 1000112108 EN Version: U Status: RL (released | freigegeben | validé) printed: 09.03.2023

WWW.FLUTECH.CO.TH SALES@FLUTECH.CO.TH + 66 (0) 2384-6060 + 66 (0) 2384-5701

8. Networking and combination with other Bürkert products

The **globe valve Type 2101** can be combined with the **position feedback Type 8690/8697** and the **control head Type 8691/8695** to **0 Type 8801-GC**.

Note:

- For the configuration of further valve systems please use the **product enquiry** form at the end of this document.
- You order two components and receive a completely assembled and tested valve.

Globe valve

Type 2101
(Example for flange connection)

Position feedback

Type 8690

Type 8697

Pneumatic control for decentralised automation of ELEMENT process valves

Control head

Type 8691

Type 8695

Control head for decentralised automation of ELEMENT process valves

Valve system
On/Off ELEMENT

Type 8801-GC-K

Type 8801-GC-U

Type 8801-GC-H

Type 8801-GC-M

ELEMENT On/Off valve system with decentralised automation

DTS 1000112108 EN Version: U Status: RL (released | freigegeben | validé) printed: 09.03.2023

Visit product website

WWW.FLUTECH.CO.TH SALES@FLUTECH.CO.TH + 66 (0) 2384-6060 + 66 (0) 2384-5701

9. Ordering information

9.1. Bürkert eShop – Easy ordering and quick delivery

Bürkert eShop – Easy ordering and fast delivery

You want to find your desired Bürkert product or spare part quickly and order directly? Our online shop is available for you 24/7. Sign up and enjoy all the benefits.

Order online now

9.2. Bürkert product filter

Bürkert product filter – Get quickly to the right product

You want to select products comfortably based on your technical requirements? Use the Bürkert product filter and find suitable articles for your application quickly and easily.

Try out our product filter

9.3. Ordering chart for flange connection

Valves with flow direction below seat

Control function	Nominal diameter	Actuator size Ø	Min. pilot pressure	Operating pressure[3.] up to +185 °C	Article no.	Article no. certified ATEX II 2GD (mechanical)
	[mm]	[mm]	[bar(g)]	[bar(g)]		
Flange connection acc. to DIN EN 1092-1						
CF: A, see control functions[1.]	15	50(D)	5.2	25	203076	260092
	20	50(D)	5.2	16	203077	260093
		70(M)	4.8	25	203078	260094
	25	50(D)	5.2	9	203079	260095
		70(M)	4.8	16	189700	260096
	32	70(M)	4.8	8.5	203080	260099
		90(N)	5.0	25	203081	260100
	40	70(M)	4.8	6	203082	260101
		90(N)	5.0	16	203083	260103
	50	90(N)	5.0	10	203084	260104
		130(P)	5.0	25 (20[2.])	218418	260106
	65	90(N)	5.0	5	239524	260107
		130(P)	5.6	16 (15[2.])	219533	260109
	80	130(P)	5.6	10	239528	260110
	100	130(P)	5.6	6	239531	260144

1.) Further information in chapter "2. Circuit functions" on page 4.

2.) According to pressure equipment directive 2014/68/EU for compressible fluids of group 1 (dangerous gases and vapours according to article 4, paragraph (1), c), i), first indent)

3.) Observe operating limits, see "6.2. Operating limits" on page 16

DTS 1000112108 EN Version: U Status: RL (released | freigegeben | validé) printed: 09.03.2023

WWW.FLUTECH.CO.TH SALES@FLUTECH.CO.TH + 66 (0) 2384-6060 + 66 (0) 2384-5701

Control function	Nominal diameter	Actuator size Ø	Min. pilot pressure	Operating pressure[3.)] up to +185 °C	Article no.
	[mm]	[mm]	[bar(g)]	[bar(g)]	
Flange connection acc. to ANSI B16.5					
CF: A, see control functions[1.)]	15	50(D)	5.2	25	203095
	20	50(D)	5.2	16	203096
		70(M)	4.8	25	203097
	25	50(D)	5.2	9	203098
		70(M)	4.8	16	203099
	40	70(M)	4.8	6	203100
		90(N)	5.0	16	203101
	50	90(N)	5.0	10	203102
		130(P)	5.0	25 (20[2.)])	218419
	65	90(N)	5.0	5	239525
		130(P)	5.6	16 (15[2.)])	239527
	80	130(P)	5.6	10	239529
	100	130(P)	5.6	6	239532
Flange connection acc. to JIS 10K					
CF: A, see control functions[1.)]	15	50(D)	5.2	25	203111
	20	50(D)	5.2	16	203112
		70(M)	4.8	25	203113
	25	50(D)	5.2	9	203114
		70(M)	4.8	16	203115
	40	70(M)	4.8	6	203118
		90(N)	5.0	16	203121
	50	90(N)	5.0	10	203122
		130(P)	5.0	25 (20[2.)])	218471
	65	90(N)	5.0	5	239526
		130(P)	5.6	16 (15[2.)])	219537
	80	130(P)	5.6	10	239530
	100	130(P)	5.6	6	239533

1.) Further information in chapter "2. Circuit functions" on page 4.

2.) According to pressure equipment directive 2014/68/EU for compressible fluids of group 1 (dangerous gases and vapours according to article 4, paragraph (1), c), i), first indent)

3.) Observe operating limits, see "6.2. Operating limits" on page 16

Further versions on request

Approval
Food processing, drinking water, oxygen, fuel gases, explosion protection

Pressure
Other versions for operating pressures up to 25 bar(g)
Vacuum version down to -0.9 bar(g)

Material
Seal: NBR, FKM, EPDM

Temperature
High temperature version up to 230 °C
Hot water version up to 200 °C
Low temperature version down to -40 °C

Process connection
Clamp connection, welded connection

DTS 1000112108 EN Version: U Status: RL (released | freigegeben | validé) printed: 09.03.2023

WWW.FLUTECH.CO.TH SALES@FLUTECH.CO.TH + 66 (0) 2384-6060 + 66 (0) 2384-5701

bürkert

Valves with flow direction above seat

Control function	Nominal diameter [mm]	Actuator size Ø [mm]	Min. pilot pressure [bar(g)]	Operating pressure[3.)] up to +185 °C [bar(g)]	Article no.	Article no. certified ATEX II 2GD (mechanical)
Flange connection acc. to DIN EN 1092-1						
CF: A, see control functions[1.)]	15	50(D)	See Diagram[2.)]	16	203086	260145
	20	50(D)		16	203087	260146
	25	50(D)		16	203088	260151
	32	70(M)		16	203091	260153
	40	70(M)		16	203092	260154
	50	70(M)		12	204973	260157
		90(N)		16	203094	260158

Control function	Nominal diameter [mm]	Actuator size Ø [mm]	Min. pilot pressure [bar(g)]	Operating pressure[3.)] up to +185 °C [bar(g)]	Article no.
Flange connection acc. to ANSI B16. 5					
CF: A, see control functions[1.)]	15	50(D)	See Diagram[2.)]	16	203103
	20	50(D)		16	203104
	25	50(D)		16	203105
	40	70(M)		16	203107
	50	70(M)		12	204974
		90(N)		16	203109
Flange connection acc. to JIS 10K					
CF: A, see control functions[1.)]	15	50(D)	See Diagram[2.)]	16	203123
	20	50(D)		16	203124
	25	50(D)		16	203125
	40	70(M)		16	203127
	50	70(M)		12	204975
		90(N)		16	203129

1.) Further information in chapter "2. Circuit functions" on page 4.

2.) See diagram in chapter "Pilot pressure diagram for flow direction above seat (control function A)" on page 15

3.) Observe operating limits, see "6.2. Operating limits" on page 16

Further versions on request	
Approval Food processing, drinking water, oxygen, fuel gases, explosion protection	**Pressure** Other versions for operating pressures up to 25 bar(g) Vacuum version down to -0.9 bar(g)
Material Seal: NBR, FKM, EPDM	**Temperature** High temperature version up to 230 °C Hot water version up to 200 °C Low temperature version down to -40 °C
Process connection Clamp connection, welded connection	

DTS 1000112108 EN Version: U Status: RL (released | freigegeben | validé) printed: 09.03.2023

WWW.FLUTECH.CO.TH SALES@FLUTECH.CO.TH + 66 (0) 2384-6060 + 66 (0) 2384-5701

bürkert

Product Enquiry Form - Pneumatic Shut-off Valves ELEMENT

Thank you for your interest in our products! In order to provide you with optimum advice, please fill out the following form and send it to your **Bürkert representative** or E-mail address: info@burkert.com. All information submitted will of course be kept strictly confidential.

Please fill in the **required fields**! *

***Note:** The interactive functions of this PDF may be restricted depending on the PDF reader used.

Personal Information			
Company		**Contact person**	
Customer no.		**Department**	
Street		**Postcode / Town**	
Telephone no.		**E-mail**	

Delivery			
	Quantity		Required delivery date

Operating data				
Function (Function of the control valve in the process / process description)				
Pipeline	DN		PN	
Operating medium				
Type of medium	○ Fluid	○ Steam	○ Gas	
Operating pressure			Unit	
Medium temperature		○ °C / ○ °F		
Ambient temperature		○ °C / ○ °F		

Valve body				
Construction	○ Angle seat valve[1.)]	○ Globe valve		
Actuator material	○ Stainless steel/PPS	○ Stainless steel[1.)]	○ PPS	○ PA
Housing material	○ Stainless steel	○ Gunmetal[1.)]		
Seat seal	○ PTFE ○ EPDM	○ NBR ○ Other	○ PEEK	○ FKM
DN / Nominal pressure	DN	PN		
Flow coefficient	K_V m³/h	C_V GPM(US)		
Connection	○ **Flange**[1.)]	DIN EN 1092-1	ANSI B16.5	JIS 10K
	○ **Thread**	G	NPT	RC
	○ **Weld**[1.)]	DIN EN ISO 1127 / ISO 4200	DIN 11850 2 / DIN 11866 A	ASME BPE
	○ **Clamp**[1.)]	ASME BPE	DIN 32676 A (tube ISO 4200)	DIN 32676 B (tube DIN 11850)
	○ **Other**			

1.) Not available for Type 2006 and 2106.

Valve data			
Circuit Function	○ A: Normally closed	○ B: Normally open	○ I: Double-acting[2.)]
Control pressure	Min.	Max.	

2.) Not available for Type 2006 and 2106.

DTS 1000112108 EN Version: U Status: RL (released | freigegeben | validé) printed: 09.03.2023

Visit this product area on the website ▸

© Christian Bürkert GmbH & Co. KG, subject to change

WWW.FLUTECH.CO.TH SALES@FLUTECH.CO.TH + 66 (0) 2384-6060 + 66 (0) 2384-5701

Approvals / Conformities
☐ For use with food (conform to EG regulation no. 1935/2004)
☐ For use with food (conform to FDA)
☐ Explosion protection in accordance with ATEX II 2GD mech. / IECex
☐ European Gas Appliances Directive (EU) 2016/426, DVGW DIN EN 161 and DIN EN 16678
☐ Suitable for drinking water[3.)]
☐ Certificate for the fulfilment of the order EN-ISO 10204 2.1 (Article no. 440788)
☐ Test report EN-ISO 10204 2.2 (Article no. 803722)
☐ Conformity certification for raw material EN-ISO 10204 3.1 (included)

3.) For use with drinking water for medium temperatures up to 85 °C in accordance with the Drinking Water Ordinance §17 and the assessment principles of the Federal Environment Agency.

Additional Requirements / Comment

Send form Delete form

DTS 1000112108 EN Version: U Status: RL (released | freigegeben | validé) printed: 09.03.2023

© Christian Bürkert GmbH & Co. KG, subject to change

WWW.FLUTECH.CO.TH SALES@FLUTECH.CO.TH + 66 (0) 2384-6060 + 66 (0) 2384-5701

bürkert

Control heads / pneumatic control for on/off process valves of the ELEMENT series

For actuator size ø70/ø90/ø130 mm	For actuator size ø50 mm
☐ **Control head Type 8691** ▸	☐ **Control head Type 8695** ▸

- Inductive position sensor with automatic Teach function
- Coloured high power LEDs
- With/without pilot valve for single or double-acting actuators
- Fieldbus communication
- Hygienic stainless steel design

Pneumatic function Single-acting Double-acting Without pilot valve	**Electrical connection** Cable gland M12 connector
Communication AS-Interface IO-Link Bürkert Systembus (büS)[1.)] Without	**Approvals** ATEX cat. 3GD, IECEx Without

1.) Based on CANopen

For actuator size ø70/ø90/ø130 mm	For actuator size ø50 mm
☐ **Pneumatic control unit / feedback Type 8690** ▸	☐ **Pneumatic control unit / feedback Type 8697** ▸

- Visual status indicator
- Micro- or proximity switches for end position feedback
- With/without pilot valve for single- or double-acting actuators
- Optional intrinsically safe version acc. to ATEX / IECEx

Pneumatic function Single-acting Double-acting (Type 8690) Without pilot valve	**Electrical connection** Cable gland M12 connector
Number of position feedback switches 1x 2x	**Approvals** ATEX cat. 3GD, IECEx ATEX cat. 2DG, IECEx Without

Position feedback switch

Micro-switch 24 V DC	Micro-switch 50…225 V DC/AC (Type 8690)	Inductive switch 3-wire PNP
Inductive switch 2-wire NAMUR	Inductive switch 2-wire 24 V DC	Without

Send form Delete form

DTS 1000112108 EN Version: U Status: RL (released | freigegeben | validé) printed: 09.03.2023

Visit this product area on the website ▸

© Christian Bürkert GmbH & Co. KG, subject to change

WWW.FLUTECH.CO.TH SALES@FLUTECH.CO.TH + 66 (0) 2384-6060 + 66 (0) 2384-5701