DATA SHEET

Type 2100

bürkert
FLUID CONTROL SYSTEMS

Pneumatically operated 2/2-way angle seat valve ELEMENT for decentralized automation

- High flow rates
- Long service life
- Easy integration of automation units with ELEMENT
- Flow-optimised stainless steel valve body with sleeve, clamp or weld connection
- Suitable for steam

Product variants described in the data sheet may differ from the product presentation and description.

Can be combined with

Type 8690
Pneumatic control for decentralised automation of ELEMENT process valves

Type 8691
Control head for decentralised automation of ELEMENT process valves

Type 8695
Control head for decentralised automation of ELEMENT process valves

Type 8697
Pneumatic control for decentralised automation of ELEMENT process valves

Type 8801
ELEMENT On/Off Valve Systems with decentralized automation – overview

Type 8840
Modular process valve cluster – distribution and collecting

Type description

The Type 2100 angle seat valve is specially optimised for decentralized process automation and fulfils the tough criteria in process environments. Its unique design allows easy the integration of automation units in all expansion stages, from electrical/optical position feedback to pneumatic control and integrated fieldbus interface. Maximum service life and tightness are achieved by the proven self-adjusting v-seal packing gland. The highly integrated system of valve and automation unit is characterised by its compact and smooth design, integrated pilot air ducts, protection classes IP65/67, NEMA Type 4X and high resistance to chemicals.

DTS 1000496323 EN Version: G Status: RL (released | freigegeben | validé) printed: 09.03.2023

Table of contents

DTS 1000496323 EN Version: G Status: RL (released | freigegeben | validé) printed: 09.03.2023

1. General technical data

Product properties	
Dimensions	Detailed information can be found in chapter "5. Dimensions" on page 7.
Material	Detailed information can be found in chapter "4. Materials" on page 6.
Design	Angle seat valve
Nominal diameter	DN 10…DN 80, NPS ⅜…NPS 3
Safety setting in case of power failure	Normally closed (control function A), normally open (control function B)
Flow direction	Flow to open (below seat), Flow to close (above seat)
Performance data	
Operating pressure	0 bar(g)…25 bar(g), vacuum up to -0.9 bar (g) (option), see "6.2. Operating limits" on page 15
Nominal pressure	PN 25 (DIN EN 1333), Class 150 (DIN EN 1759)
Pilot pressure	2.5 bar(g)…10 bar(g), see "6. Performance specifications" on page 12
K_V value	4.8 m^3/h…140 m^3/h, see "6. Performance specifications" on page 12
Medium data	
Medium	Steam, water, neutral gases, alcohol, oils, fuels, hydraulic fluids, salt solution, alkali solutions, organic solvents, for fuel gases of category I, II and III acc. to Gas Appliances Regulation (EU) 2016/426 and oxygen
Medium temperature	-40 °C…230 °C, see "6.2. Operating limits" on page 15
Viscosity	Max. 600 mm^2/s
Control medium	Air, neutral gases
Process/Port connection & communication	
Port connection	
Threaded connection	G (DIN ISO 228-1) NPT (ASME B 1.20.1) Rc (ISO 7-1)
Welded connection	DIN EN ISO 1127 / ISO 4200 / DIN 11866 B DIN 11850 2 / DIN 11866 A ASME BPE / DIN 11866 C SMS 3008
Clamp connection	DIN 32676 B (pipe ISO 4200) DIN 32676 A (pipe DIN 11850 2) ASME BPE
Pilot air port	Push-in connector (external Ø 6 mm or ¼") or thread G ⅛" (on request)
Approvals and certificates	
Conformity	Food contact 1935/2004(EG), FDA Drinking water Pressure equipment directive Gas Appliances Regulation Machinery Directive, see "3. Approvals" on page 5
Explosion proof	Explosion proof ATEX / IECex, see "3. Approvals" on page 5
Material certificate	2.2, 3.1
Environment and installation	
Ambient temperature	-10 °C…100 °C, see "6.2. Operating limits" on page 15
Degree of protection	IP65/67
Installation position	As required, preferably with actuator in upright position

DTS 1000496323 EN Version: G Status: RL (released | freigegeben | validé) printed: 09.03.2023

2. Circuit functions

⚠ CAUTION

Risk of damage due to bursting pipes and bursting equipment when the flow is above the seat.
In the case of liquid mediums, water hammer can occur causing pipes and the device to burst.

Do not use valves with flow above the seat for liquid mediums..

Control function (CF)	Description	
Flow direction below seat for liquids and gases		
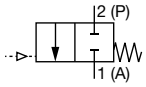	**CF: A, pneumatically operated on/off valve** 2/2-way Flow direction below seat Normally closed by spring force	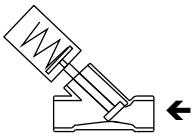
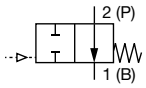	**CF: B, pneumatically operated on/off valve** 2/2-way Flow direction below seat Normally open by spring force	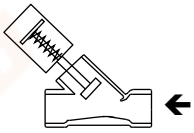
Flow direction above seat for steam and gases		
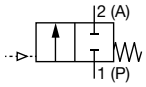	**CF: A, pneumatically operated on/off valve** 2/2-way Flow direction above seat Normally closed by spring force	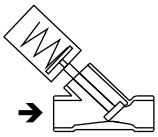
3-position actuator		
Flow direction below seat For valves with 3-position actuator an adjustable middle position is possible (option)		
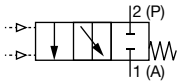	**CF: A, pneumatically operated 3-position valve** ⅔-way Flow direction below seat Normally closed by spring force	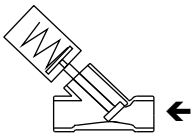

3. Approvals

Approvals	Description
FDA	**Food contact** Materials in contact with the medium conform to EC Regulation 1935/2004 Materials in contact with the medium conform to FDA (option)
H_2O	**Drinking water** Suitable for use with drinking water for medium temperatures up to 85 °C in accordance with the Drinking Water Ordinance §17 and the assessment principles of the Federal Environment Agency (option).
O_2	**Oxygen** Suitable for use with gaseous oxygen with medium temperature up to 60 °C and operating pressure up to 20 bar(g) (option)
	Explosion proof As category 2 device suitable for zone 1/21 and zone 2/22 (option) **ATEX**: II 2G Ex h IIC T4 Gb II 2D Ex h IIIC T135 °C Db **IECEx**: Ex h IIC T4 Gb Ex h IIIC T135 °C Db
	Fuel gases Approval according to the European Gas Appliance Regulation (EU) 2016/426, DVGW DIN EN 161 and DIN EN 16678, Class A or Class D, suitable for medium temperature 0…+160 °C, ambient temperature -10…+60 °C and operating pressure 0…16 bar(g) (option)
	Safety requirements Evaluation of functional safety according to IEC 61508 (on request)

4. Materials

4.1. Chemical Resistance Chart – Bürkert resistApp

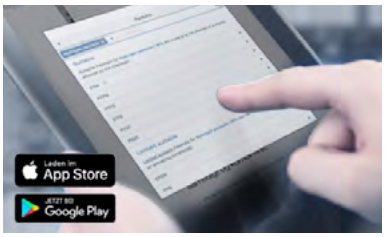

Bürkert resistApp – Chemical Resistance Chart

You want to ensure the reliability and durability of the materials in your individual application case? Verify your combination of media and materials on our website or in our resistApp.

Start Chemical Resistance Check

4.2. Material specifications

Note:
The lubricants for the spindle seal and actuator are classified acc. to NSF H1.

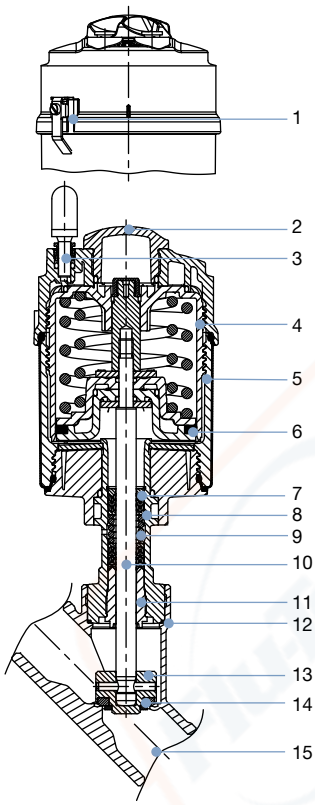

No.	Element	Material
1	Ground terminal	Stainless steel 1.4301/1.4305 only for ATEX version
2	Optical position indicator	Optical position indicator Polysulfone PSU
3	Pilot air ports	Push-in connector PP (Standard) On request: Thread G ⅛" Stainless steel 1.4305
4	Actuator	PPS
5	Cover	Stainless steel 1.4561 (316Ti)
6	Piston seal	FKM
7	Spring	Stainless steel 1.4310
8	Pipe	Stainless steel 1.4401 (316)/1.4404 (316L)
9	Spindle seal	PTFE V-Rings (filled), with spring compensation
10	Spindle	Stainless steel 1.4401 (316)/1.4404 (316L)
11	Spindle guide	PEEK
12	Body seal	Graphite, PTFE (Option)
13	Swivel plate	Stainless steel 1.4401 (316)/1.4404 (316L)
14	Seat seal	PTFE, PEEK (Option)
15	Valve body	Stainless steel CF3M

DTS 1000496323 EN Version: G Status: RL (released | freigegeben | validé) printed: 09.03.2023

5. Dimensions

5.1. Actuator

Note:
Dimensions in mm, unless otherwise stated

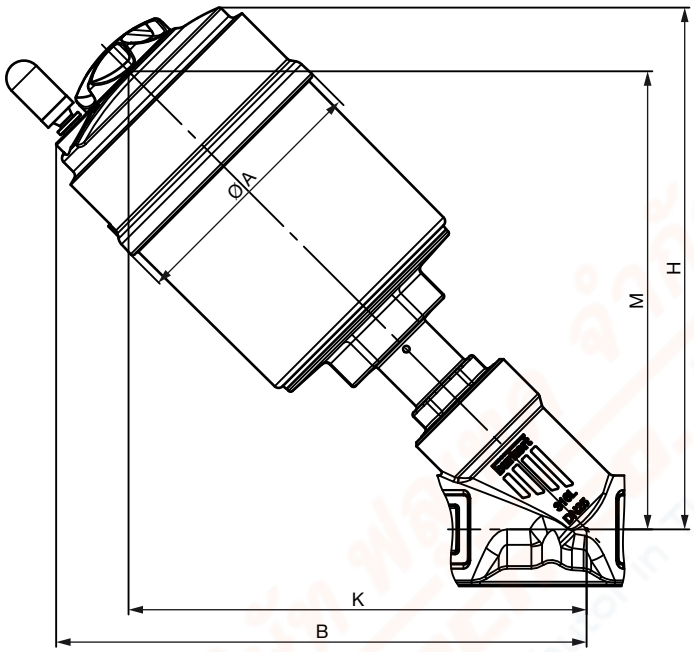

Nominal diameter (pipe)		Actuator size	Ø A	B[1.)]	H[1.)]	K/M[1.)]
DN	NPS	[mm]				
10	⅜	50(D)	64.5	166	163	147
		70(M)	91	182	178	156
15	½	50(D)	64.5	166	163	147
		70(M)	91	182	178	156
20	¾	50(D)	64.5	174	171	155
		70(M)	91	189	186	163
25	1	50(D)	64.5	175	173	156
		70(M)	91	191	188	165
		90(N)	120	229	228	203
32	1¼	70(M)	91	201	197	174
		90(N)	120	243	242	217
		130(P)	159	293	293	254
40	1½	70(M)	91	204	201	178
		90(N)	120	246	245	220
		130(P)	159	296	296	257
50	2	70(M)	91	223	219	196
		90(N)	120	262	261	236
		130(P)	159	312	312	273
65	2½	90(N)	120	274	273	248
		130(P)	159	324	324	285
80	3	130(P)	159	344	344	305

1.) Dimensions for B, H, K and M are maximum dimensions and can be up to 6 mm smaller, depending on nominal diameter and standard.

DTS 1000496323 EN Version: G Status: RL (released | freigegeben | validé) printed: 09.03.2023

Valve system On/Off ELEMENT

Actuator with control head and pneumatic controls/position feedback

Note:

- More information see "7. Product accessories" on page 17
- Dimensions in mm, unless otherwise stated

Control head

Type 8691

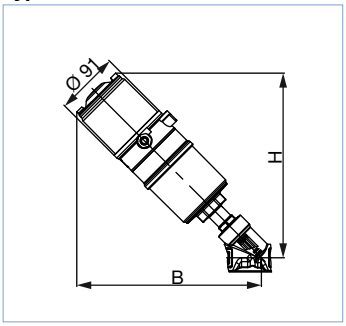

Type 8695

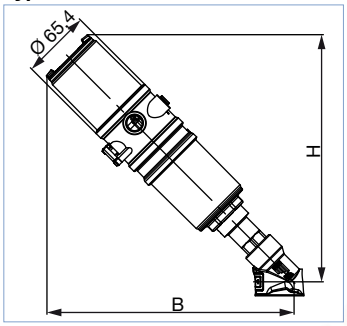

Pneumatic control unit/Position feedback

Type 8690

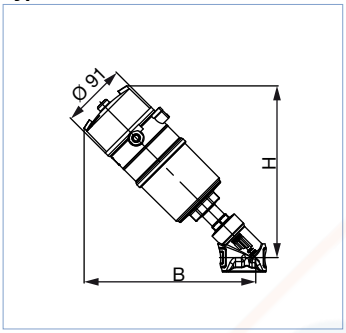

Type 8697

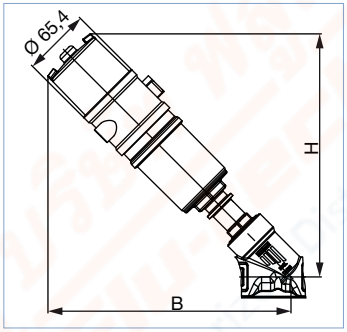

Nominal diameter (pipe)		Actuator size	B/H[1.)] with	
DN	**NPS**	**[mm]**	**8690 or 8697**	**8691 or 8695**
10	⅜	50(D)	226	239
		70(M)	232	256
15	½	50(D)	226	239
		70(M)	232	256
20	¾	50(D)	234	247
		70(M)	240	264
25	1	50(D)	236	249
		70(M)	242	266
		90(N)	276	303
32	1¼	70(M)	252	275
		90(N)	294	318
		130(P)	328	353
40	1½	70(M)	255	279
		90(N)	297	321
		130(P)	334	358
50	2	70(M)	274	297
		90(N)	313	337
		130(P)	351	374
65	2½	90(N)	325	349
		130(P)	362	386
80	3	130(P)	382	406

1.) Dimensions for B and H are maximum dimensions and can be up to 6 mm smaller, depending on nominal diameter and standard.

5.2. Body with threaded connection

Note:
Dimensions in mm, unless otherwise stated

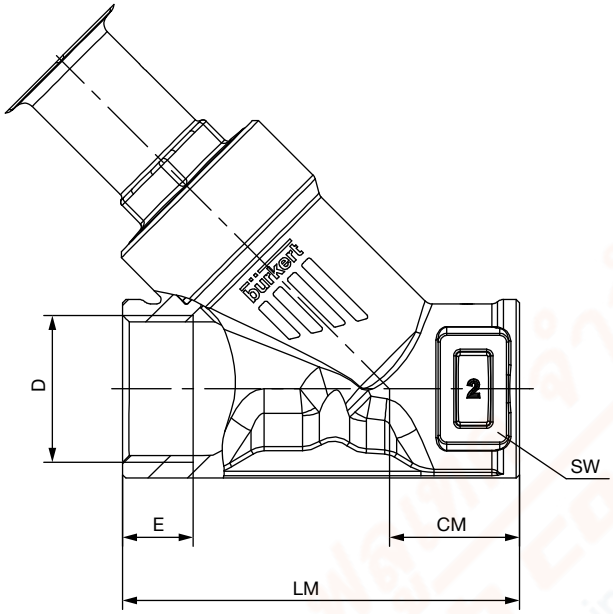

Nominal diameter (pipe)	G (DIN ISO 228-1), NPT (ASME B 1.20.1), Rc (ISO7-1)						
	D	E			CM	LM	SW
DN	NPS	G	NPT	Rc			
15	½	14	13.7	13.2	24	65	27
20	¾	16	14.0	14.5	27	75	34
25	1	18	16.8	16.8	29.5	90	41
32	1¼	16	17.3	19.1	36	110	50
40	1½	18	17.3	19.1	35	120	55
50	2	24	17.6	23.4	45	150	70
65	2½	26	23.7	26.7	57	185	85
80	3	28	–	–	71	220	100

5.3. Body with welded connection

Note:
Dimensions in mm, unless otherwise stated

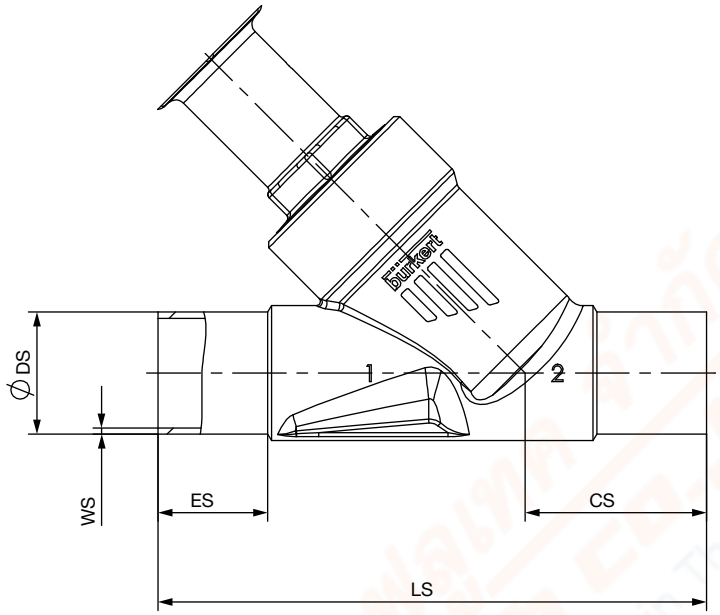

Nominal diameter (pipe)	DIN EN ISO 1127 ISO 4200 DIN 11866 B					DIN 11850 2 DIN 11866 A				
DN	ES	CS	LS	ØDS	WS	ES	CS	LS	ØDS	WS
15	19	34	100	21.3	1.6	19	34	100	19	1.5
20	20	39	115	26.9	1.6	20	39	115	23	1.5
25	26	43	130	33.7	2.0	26	43	130	29	1.5
32	26	45	145	42.4	2.0	26	45	145	35	1.5
40	26	49	160	48.3	2.0	26	49	160	41	1.5
50	26	50	175	60.3	2.0	26	50	175	53	1.5
65	26	50	210	76.1	2.3	26	50	210	70	2

Nominal diameter (pipe)	ASME BPE DIN 11866 C				
NPS	ES	CS	LS	ØDS	WS
½	30	46	135	12.7	1.65
¾	30	52	145	19.05	1.65
1	30	51	152	25.4	1.65
1½	30	60	182	38.1	1.65
2	30	64	210	50.8	1.65
2½	26	56	230	63.5	1.65

5.4. Body with clamp connection

Note:
Dimensions in mm

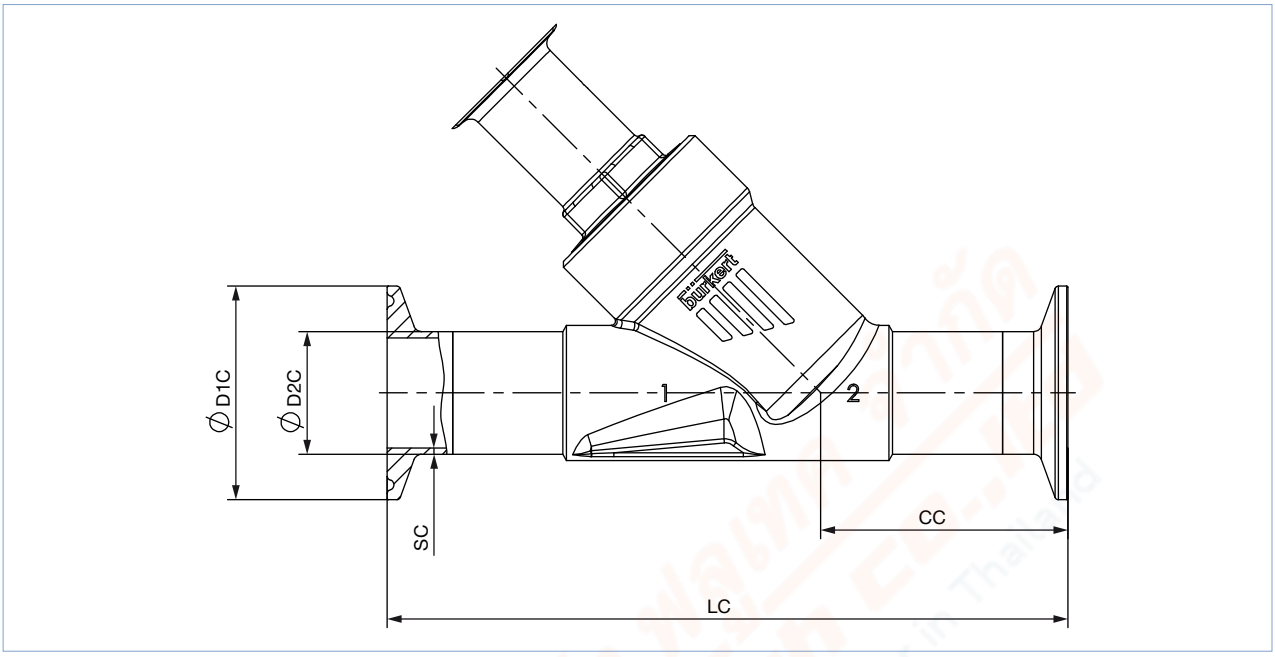

Nominal diameter (pipe)	Clamp: DIN 32676 B Pipe: EN ISO 1127 1 ISO 4200 DIN 11866 B					Clamp: DIN 32676 A (DN 15 similar DIN 32676 B) Pipe: DIN 11850 2 DIN 11866 A				
DN	**LC**	**CC**	**ØD1 C**	**ØD2 C**	**SC**	**LC**	**CC**	**ØD1 C**	**ØD2 C**	**SC**
15	156	49.0	50.5	21.3	1.6	130	49.5	34.0	19	1.5
20	150	56.5	50.5	26.9	1.6	150	57.0	34.0	23	1.5
25	160	58.0	50.5	33.7	2.0	160	58.5	50.5	29	1.5
32	200	57.5	50.5	42.4	2.0	180	58.0	50.5	35	1.5
40	200	69.0	64.0	48.3	2.0	200	69.5	50.5	41	1.5
50	230	77.5	77.5	60.3	2.6	230	78.0	64.0	53	1.5

Nominal diameter (pipe)	Clamp: ASME BPE Pipe: ASME BPE DIN 11866 C				
NPS	**LC**	**CC**	**ØD1 C**	**ØD2 C**	**SC**
½	130	49.0	25.0	12.7	1.65
¾	150	56.5	25.0	19.05	1.65
1	160	58.0	50.5	25.4	1.65
1½	200	69.0	50.5	38.1	1.65
2	230	77.5	64.0	50.8	1.65

DTS 1000496323 EN Version: G Status: RL (released | freigegeben | validé) printed: 09.03.2023

6. Performance specifications

6.1. Fluidic data

Overview of fluidic data for flow below seat (for liquids and gases)

Note:

- K_V value [m³/h]: Measured with water at +20 °C, 1 bar pressure at valve inlet and free outlet
- Pressure data [bar]: Overpressure to atmospheric pressure

Nominal diameter		Actuator size	K_V value	Pilot pressure min.	Operating pressure max. [bar(g)]		
					CF: A		CF: B
					Seat seal		
DN	NPS	[mm]	[m³/h]	CF: A [bar(g)]	PTFE	PEEK	PTFE
10	⅜	50(D)	4.8	5.2	25	25	25
		70(M)	4.8	5	25	25	25
15	½	50(D)	5	5.2	25	25	25
		70(M)	5	5	25	25	25
20	¾	50(D)	10	5.2	16	13.5	25
		70(M)	11	5	25	25	25
25	1	50(D)	14	5.2	9	–	25
		70(M)	18	5	16	13.5	25
		90(N)	18	5	25	25	25
32	1¼	70(M)	27	5	8.5	–	25
		90(N)	28	5	25	19.5	25
		130(P)	28	5	–	25	–
40	1½	70(M)	38	5	6	–	25
		90(N)	40	5	16	13.5	25
		130(P)	42	4.9	25	25	25
50	2	70(M)	52	–	–	–	16
		90(N)	55	5	10	8	25
		130(P)	62	5	25 (20[1.)])	23 (20[1.)])	25 (20[1.)])
65	2½	90(N)	85	5	5	–	14
		130(P)	95	5.6	16 (15[1.)])	12.5	16 (15[1.)])
80	3	130(P)	140	5.6	10	8	11

1.) According to pressure equipment directive 2014/68/EU for compressible fluids of group 1 (dangerous gases and vapours acc. to Article 4, paragraph (1), c), i), first indent)

Pilot pressure diagram with flow direction below seat (Control function B)

Actuator size: Ø50

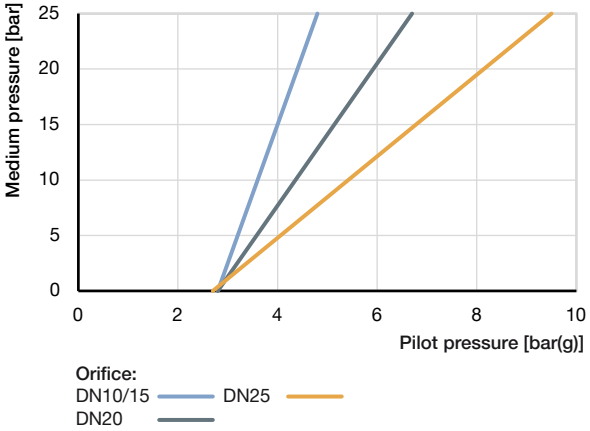

Actuator size: Ø70

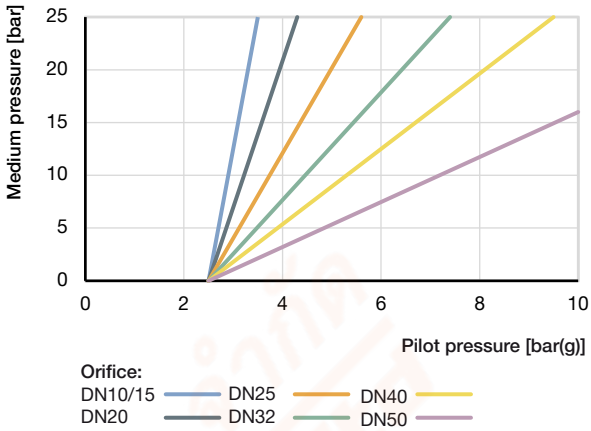

Actuator size: Ø90

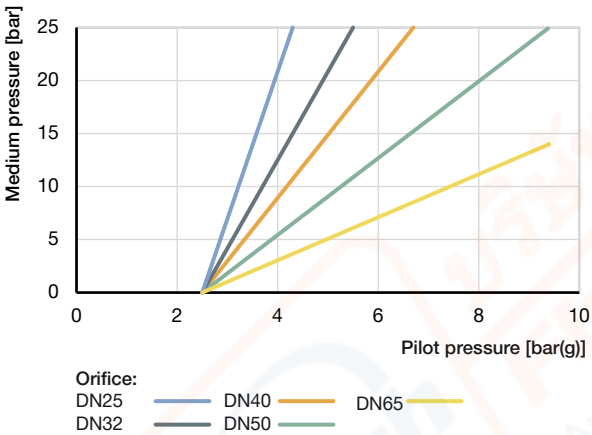

Actuator size: Ø130

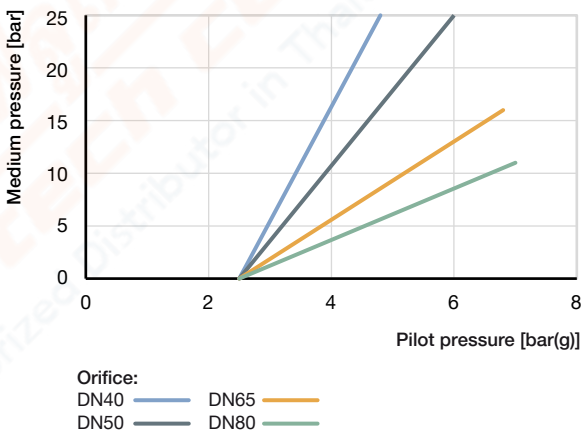

Overview of fluidic data with flow above seat (for gases and steam)

⚠ CAUTION

Risk of damage due to bursting pipes and bursting equipment when the flow is above the seat.
In the case of liquid mediums, water hammer can occur causing pipes and the device to burst.

Do not use valves with flow above the seat for liquid mediums..

Note:

- K_V-value water [m³/h]: Measured at +20 °C, 1 bar pressure at valve inlet and free outlet.
- Pressure data [bar]: Overpressure to atmospheric pressure

Nominal diameter	Actuator size	K_V value	Operating pressure max. up to +185 °C
DN	[mm]	[m³/h]	CF: A [bar(g)] PTFE
15	50(D)	5	16
	70(M)	5.1	16
20	50(D)	10	16
	70(M)	12	16
25	50(D)	15	16
	70(M)	19	16
32	70(M)	28	16
40	70(M)	38	16
	90(N)	40	16
50	70(M)	50	12
	90(N)	55	16

Pilot pressure diagram with flow direction above seat (Control function A)

Actuator size: Ø50

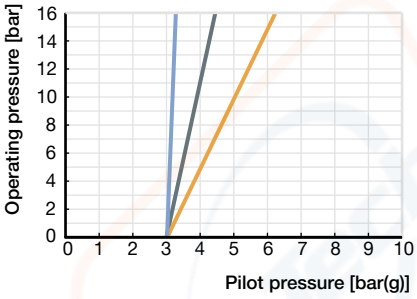

Orifice:
DN15 — **DN25** —
DN20 —

Actuator size: Ø70

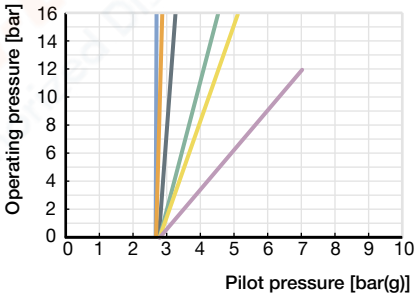

Orifice:
DN15 — **DN32** —
DN20 — **DN40** —
DN25 — **DN50** —

Actuator size: Ø90

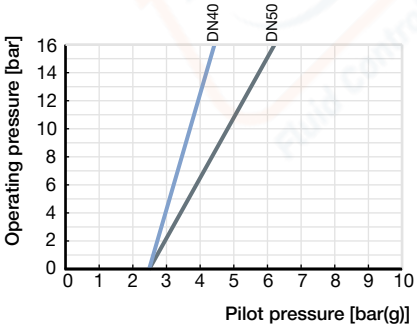

Orifice:
DN40 —
DN50 —

6.2. Operating limits

Operating limits for medium temperature and operating pressure

The operating range of Bürkert process valves is in addition to the maximum operating pressures limited by the nominal pressure according to the relevant standard.

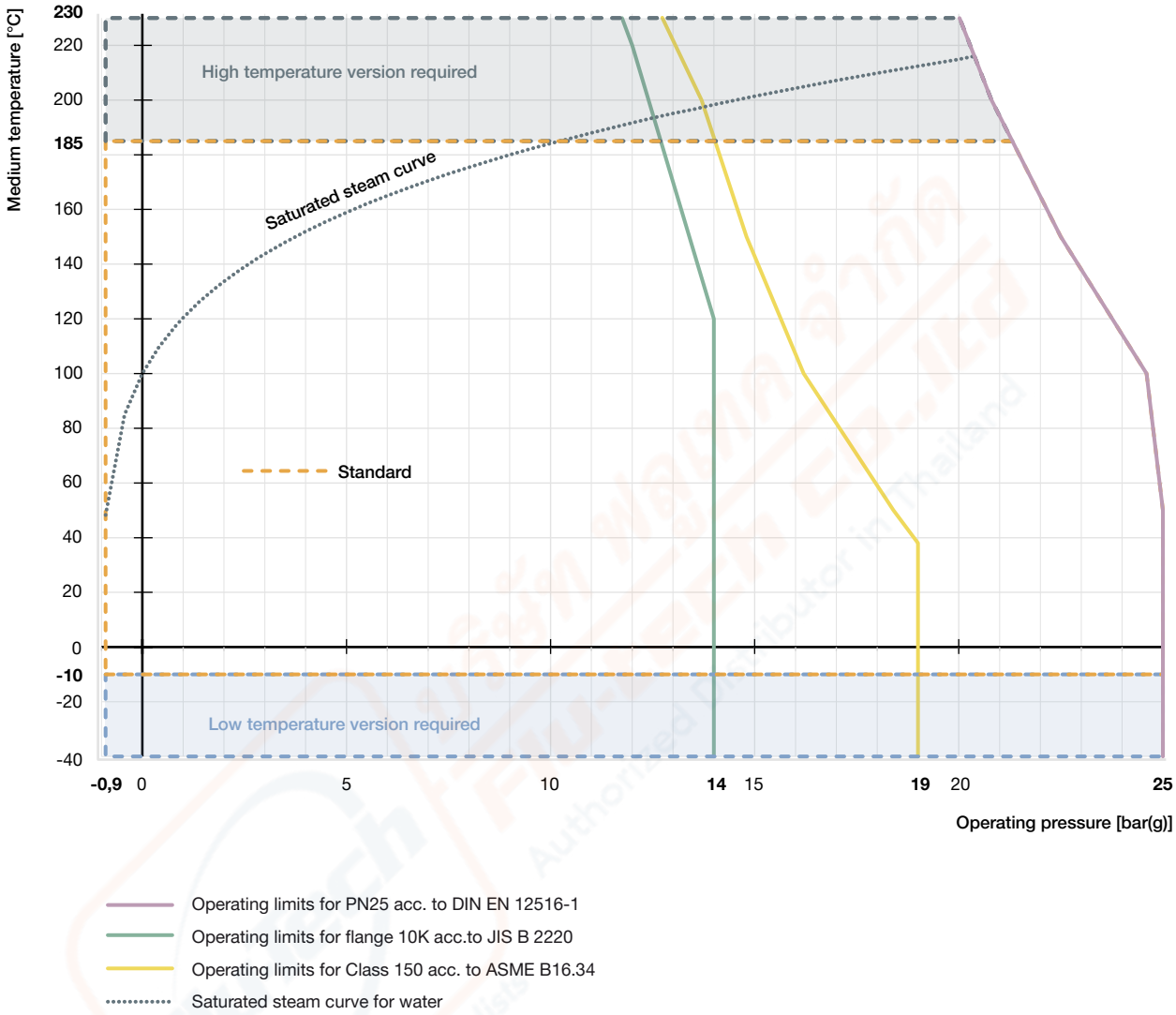

Operating limits for ambient and medium temperature

ELEMENT On/Off valve

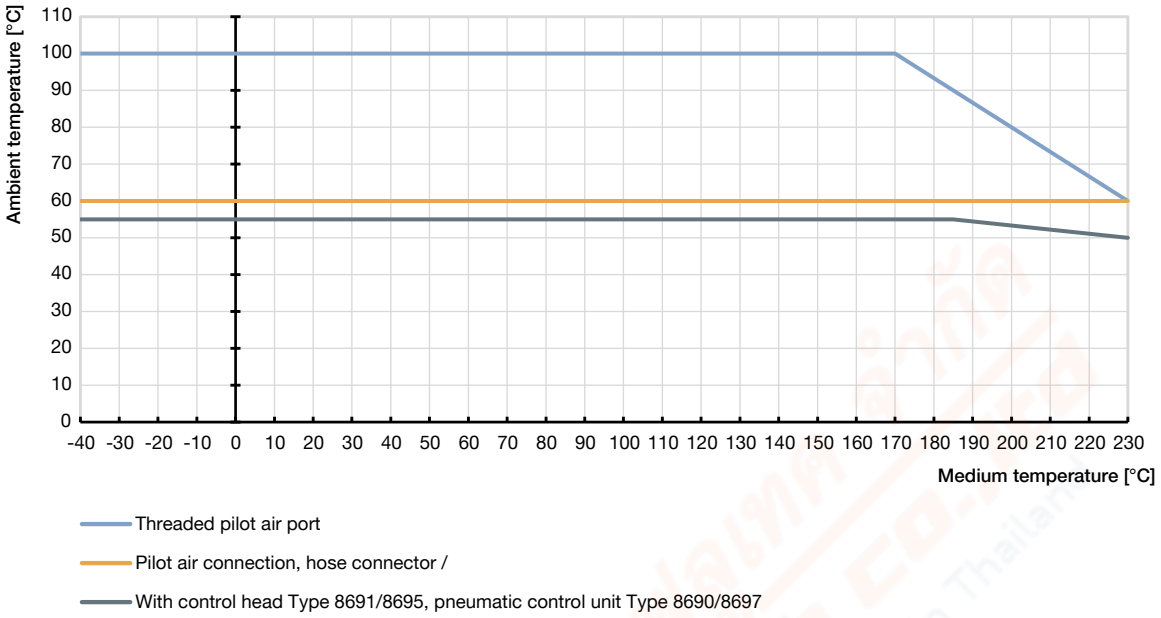

Operating limits for optional versions

High temperature version
By adjusting the spindle seal, this version is suitable for applications with steam, neutral gases and other heat transfer media up to 230 °C.

Hot water version
By adjusting the spindle seal, this version is suitable for applications with steam, neutral gases and other heat transfer mediums up to 230 °C.

Drinking water version
Materials in contact with the medium are tested for suitability with drinking water up to 85 °C.

Vacuum version
Without leakage bore, this design is suitable down to -0.9 bar(g).

Low temperature version
Suitable for minimum medium temperatures down to -40 °C

Version for oxygen
Non-metallic wetted materials are tested for suitability with oxygen and suitable for operating pressures up to 25 bar(g) and medium temperatures up to 60 °C.

DTS 1000496323 EN Version: G Status: RL (released | freigegeben | validé) printed: 09.03.2023

7. Product accessories

Control head	
Type 8691 ▸ **Actuator size Ø 70/90/130 mm**	**Description**
	The control heads, Type 8691 and 8695, are optimized for integrated mounting on process valves of the 21XX series. The valve position is detected without contact via an analog sensor element, which automatically detects and stores the valve end positions during commissioning using the Teach-In function. The integrated pilot valve controls single or double-acting actuators. The switching status of the valve is indicated by coloured high-performance LEDs. **Features** • Status indication via coloured high-power LEDs • Non-wearing inductive position sensor • Pilot valve with manual override • Teach-In function for automatic recognition of the valve end positions • Hygienic stainless steel design • Easy to clean chemical resistant housing according to IP65/67, 4X rating • AS-Interface, IO-Link, Bürkert system bus (büS) **Customer benefits** • Simple and safe commissioning by means of Teach-In function • Easy process monitoring and fault detection through visible coloured high-power LEDs • High degree of system availability due to increased actuator service life by means of spring chamber ventilation • Minimal space requirement in the plant piping for more flexibility in plant design
Type 8695 ▸ **Actuator size Ø 50 mm**	
	

Pneumatic Control unit/Position feedback	
Type 8690 ▸ **Actuator size Ø 70/90/130 mm**	**Description**
	The pneumatic control units, Type 8690 and 8697, are optimized for integrated mounting on process valves of the 21XX series. Mechanical or inductive limit switches detect the valve position. The integrated pilot valve controls single or double-acting (Type 8690) actuators. **Features** • Optical position indicator • Mechanical or inductive proximity switches for end position detection • Pilot valve with manual override • Compact design • Easy to clean, chemical resistant housing according to IP65/67, 4X rating • Optional intrinsically safe design according to ATEX/IECEx **Customer benefits** • Simple and safe commissioning using the Teach-In function (Type 8697) • Signal reliability due to the automatic adjustment of the limit position switches • Minimal space requirement in the plant piping for more flexibility in plant design
Type 8697 ▸ **Actuator size Ø 50 mm**	
	

DTS 1000496323 EN Version: G Status: RL (released | freigegeben | validé) printed: 09.03.2023

8. Networking and combination with other Bürkert products

Note:
The **angle seat valve Type 2100** can be combined with the **position feedback Type 8690/8697** and the **control head Type 8691/8695** to **valve system On/Off ELEMENT Type 8801-YE**.

Note:

- For the configuration of further valve systems please use the **product enquiry** form at the end of this document.
- You order two components and receive a completely assembled and tested valve.

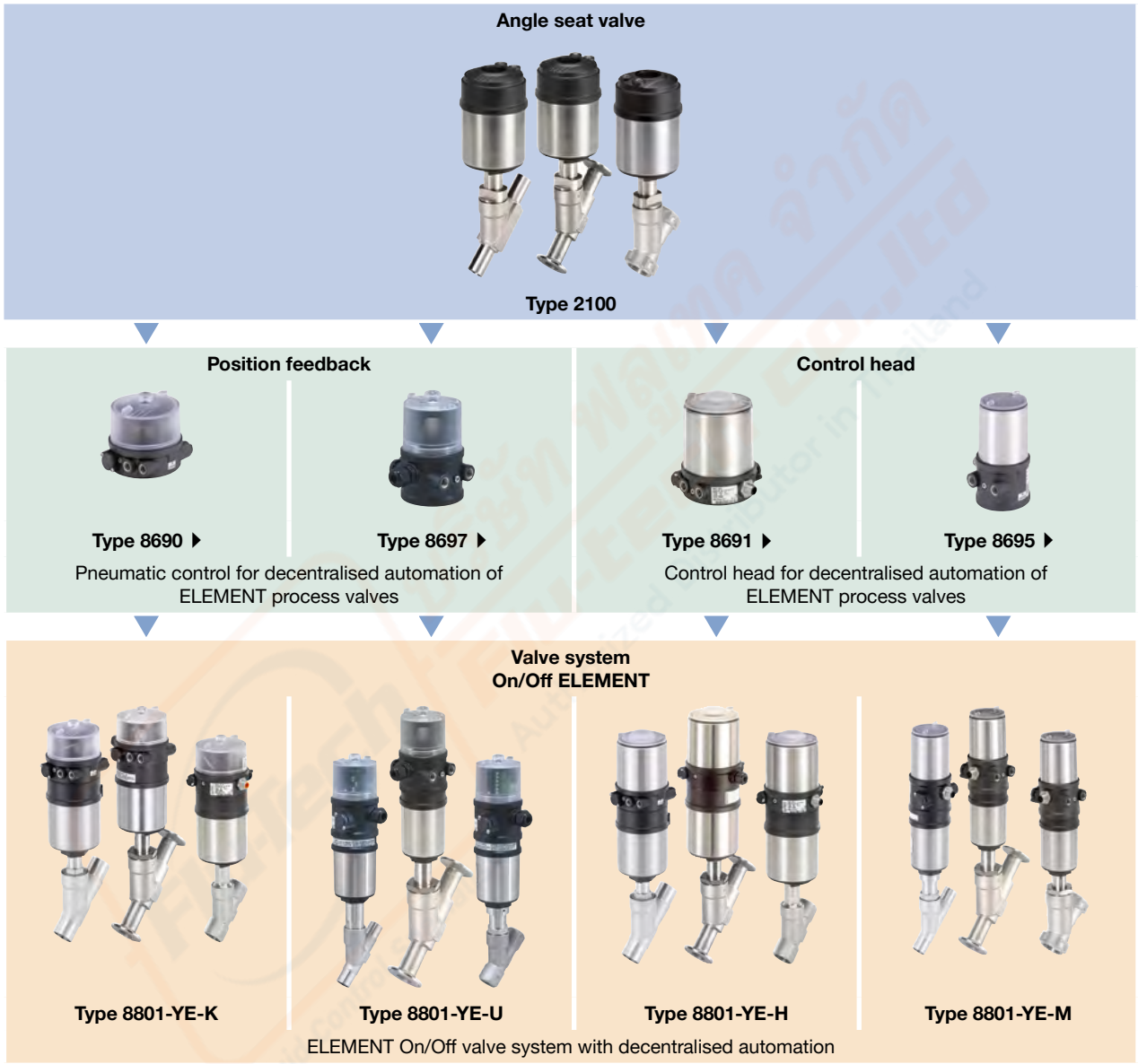

9. Ordering information

9.1. Bürkert eShop – Easy ordering and quick delivery

Bürkert eShop – Easy ordering and fast delivery

You want to find your desired Bürkert product or spare part quickly and order directly? Our online shop is available for you 24/7. Sign up and enjoy all the benefits.

Order online now

9.2. Bürkert product filter

Bürkert product filter – Get quickly to the right product

You want to select products comfortably based on your technical requirements? Use the Bürkert product filter and find suitable articles for your application quickly and easily.

Try out our product filter

9.3. Ordering chart threaded connection

Valves with flow direction below seat

Control function	Nominal diameter	Threaded port connection	Actuator size Ø	Pilot pressure min.	Operating pressure	Article no.	Article no. ATEX II 2GD certified (mechanical)
	DN	[inch]	[mm]	[bar]	[bar]		
CF: A, see control functions[1.)]	15	G ½"	50(D)	5.2	25	213619	259510
		G ½"	70(M)	5.0	25	213620	259511
	20	G ¾"	50(D)	5.2	16	227616	259513
		G ¾"	70(M)	5.0	25	213621	259515
	25	G 1"	50(D)	5.2	9	227617	259516
		G 1"	70(M)	5.0	16	213622	259517
	32	G 1¼"	70(M)	5.0	8.5	213623	259519
		G 1¼"	90(N)	5.0	25	213624	259521
	40	G 1½"	70(M)	5.0	6	213625	259523
		G 1½"	90(N)	5.0	16	213627	259524
	50	G 2"	90(N)	5.0	10	175108	259525
		G 2"	130(P)	5.0	25(20[3.)])	188610	259526
	65	G 2½"	90(N)	5.0	5	239456	259527
		G 2½"	130(P)	5.6	16(15[3.)])	239472	259530
CF: B, see control functions[1.)]	15	G ½"	50(D)	See diagram[2.)]	25	213637	259531
		G ½"	70(M)		25	213638	259532
	20	G ¾"	50(D)		25	213639	259533
		G ¾"	70(M)		25	213640	259535
	25	G 1"	70(M)		25	213641	259537
	32	G 1¼"	70(M)		25	213642	259538
	40	G 1½"	70(M)		25	213643	259539
	50	G 2"	70(M)		16	175123	259540
	65	G 2½"	90(N)		14	239464	259565
		G 2½"	130(P)		16(15[3.)])	239479	259566

1.) Further information in chapter "2. Circuit functions" on page 4

2.) See diagram in chapter "Pilot pressure diagram with flow direction below seat (Control function B)" on page 13

3.) According to pressure equipment directive 2014/68/EU for compressible fluids of group 1 (dangerous gases and vapours according to article 4, paragraph (1), c), i), first indent)

DTS 1000496323 EN Version: G Status: RL (released | freigegeben | validé) printed: 09.03.2023

Control function	Nominal diameter	Threaded port connection	Actuator size Ø	Pilot pressure min.	Operating pressure	Article no.
	DN	[inch]	[mm]	[bar]	[bar]	
CF: A, see control functions[1.)]	15	NPT ½"	50(D)	5.2	25	213644
		NPT ½"	70(M)	5.0	25	213645
	20	NPT ¾"	50(D)	5.2	16	227618
		NPT ¾"	70(M)	5.0	25	213646
	25	NPT 1"	50(D)	5.2	9	227619
		NPT 1"	70(M)	5.0	16	213647
	32	NPT 1¼"	70(M)	5.0	8.5	213648
		NPT 1¼"	90(N)	5.0	25	213649
	40	NPT 1½"	70(M)	5.0	6	213650
		NPT 1½"	90(N)	5.0	16	213651
	50	NPT 2"	90(N)	5.0	10	188641
		NPT 2"	130(P)	5.0	25(20[3.)])	188642
	65	NPT 2½"	90(N)	5.0	5	239457
		NPT 2½"	130(P)	5.6	16(15[3.)])	239473
CF: B, see control functions[1.)]	15	NPT ½"	50(D)	See diagram[2.)]	25	213661
		NPT ½"	70(M)		25	213662
	20	NPT ¾"	50(D)		25	213663
		NPT ¾"	70(M)		25	213664
	25	NPT 1"	70(M)		25	213665
	32	NPT 1¼"	70(M)		25	213666
	40	NPT 1½"	70(M)		25	213667
	50	NPT 2"	70(M)		16	188656
	65	NPT 2½"	90(N)		14	239465
		NPT 2½"	130(P)		16(15[3.)])	239480

1.) Further information in chapter "2. Circuit functions" on page 4

2.) See diagram in chapter "Pilot pressure diagram with flow direction below seat (Control function B)" on page 13

3.) According to pressure equipment directive 2014/68/EU for compressible fluids of group 1 (dangerous gases and vapours according to article 4, paragraph (1), c), i), first indent)

DTS 1000496323 EN Version: G Status: RL (released | freigegeben | validé) printed: 09.03.2023

Control function	Nominal diameter	Threaded port connection	Actuator size Ø	Pilot pressure min.	Operating pressure	Article no.
	DN	[inch]	[mm]	[bar]	[bar]	
CF: A, see control functions[1.)]	15	RC ½"	50(D)	5.2	25	213668
		RC ½"	70(M)	5.0	25	213669
	20	RC ¾"	50(D)	5.2	16	227621
		RC ¾"	70(M)	5.0	25	213670
	25	RC 1"	50(D)	5.2	9	227622
		RC 1"	70(M)	5.0	16	213671
	32	RC 1¼"	70(M)	5.0	8.5	213672
		RC 1¼"	90(N)	5.0	25	213673
	40	RC 1½"	70(M)	5.0	6	213674
		RC 1½"	90(N)	5.0	16	213675
	50	RC 2"	90(N)	5.0	10	188664
		RC 2"	130(P)	5.0	25(20[3.)])	188665
	65	RC 2½"	90(N)	5.0	5	239458
		RC 2½"	130(P)	5.6	16(15[3.)])	239474
CF: B, see control functions[1.)]	15	RC ½"	50(D)	See diagram[2.)]	25	213685
		RC ½"	70(M)		25	213686
	20	RC ¾"	50(D)		25	213687
		RC ¾"	70(M)		25	213688
	25	RC 1"	70(M)		25	213689
	32	RC 1¼"	70(M)		25	213690
	40	RC 1½"	70(M)		25	213691
	50	RC 2"	70(M)		16	188679
	65	RC 2½"	90(N)		14	239466
		RC 2½"	130(P)		16(15[3.)])	239481

1.) Further information in chapter "2. Circuit functions" on page 4

2.) See diagram in chapter "Pilot pressure diagram with flow direction below seat (Control function B)" on page 13

3.) According to pressure equipment directive 2014/68/EU for compressible fluids of group 1 (dangerous gases and vapours according to article 4, paragraph (1), c), i), first indent)

Further versions on request

Approval Food processing, drinking water, oxygen, fuel gases, explosion protection	**Pressure** Other versions for operating pressures up to 25 bar(g) Vacuum version down to -0.9 bar(g)
Material Seal: NBR, FKM, EPDM	**Temperature** High temperature version up to 230 °C Hot water version up to 200 °C Low temperature version down to -40 °C
Process connection Clamp connection, welded connection	

DTS 1000496323 EN Version: G Status: RL (released | freigegeben | validé) printed: 09.03.2023

Valves with flow direction above seat

Control function	Nominal diameter DN	Threaded port connection [inch]	Actuator size Ø [mm]	Pilot pressure min. [bar]	Operating pressure [bar]	Article no.	Article no. ATEX II 2GD certified (mechanical)
CF: A, see control functions[1.)]	15	G ½"	50(D)	See diagram[2.)]	16	213628	259567
		G ½"	70(M)		16	213629	259568
	20	G ¾"	50(D)		16	213630	259569
		G ¾"	70(M)		16	213631	259571
	25	G 1"	50(D)		16	213632	259573
		G 1"	70(M)		16	213633	259575
	32	G 1¼"	70(M)		16	213634	259576
	40	G 1½"	70(M)		16	213635	259577
		G 1½"	90(N)		16	213636	259578
	50	G 2"	70(M)		12	175115	259579
		G 2"	90(N)		16	175116	259580

1.) Further information in chapter "2. Circuit functions" on page 4

2.) See diagram in chapter "Pilot pressure diagram with flow direction above seat (Control function A)" on page 14

Control function	Nominal diameter DN	Threaded port connection [inch]	Actuator size Ø [mm]	Pilot pressure min. [bar]	Operating pressure [bar]	Article no.
CF: A, see control functions[1.)]	15	NPT ½"	50(D)	See diagram[2.)]	16	213652
		NPT ½"	70(M)		16	213653
	20	NPT ¾"	50(D)		16	213654
		NPT ¾"	70(M)		16	213655
	25	NPT 1"	50(D)		16	213656
		NPT 1"	70(M)		16	213657
	32	NPT 1¼"	70(M)		16	213658
	40	NPT 1½"	70(M)		16	213659
	50	NPT 2"	70(M)		12	188649

1.) Further information in chapter "2. Circuit functions" on page 4

2.) See diagram in chapter "Pilot pressure diagram with flow direction above seat (Control function A)" on page 14

Control function	Nominal diameter DN	Threaded port connection [inch]	Actuator size Ø [mm]	Pilot pressure min. [bar]	Operating pressure [bar]	Article no.
CF: A, see control functions[1.)]	15	RC ½"	50(D)	See diagram[2.)]	16	213676
		RC ½"	70(M)		16	213677
	20	RC ¾"	50(D)		16	213678
		RC ¾"	70(M)		16	213679
	25	RC 1"	50(D)		16	213680
		RC 1"	70(M)		16	213681
	32	RC 1¼"	70(M)		16	213682
	40	RC 1½"	70(M)		16	213683
	50	RC 2"	70(M)		12	188672

1.) Further information in chapter "2. Circuit functions" on page 4

2.) See diagram in chapter "Pilot pressure diagram with flow direction above seat (Control function A)" on page 14

DTS 1000496323 EN Version: G Status: RL (released | freigegeben | validé) printed: 09.03.2023

9.4. Ordering chart welded connection

Valves with flow direction below seat

Control function	Nominal diameter	Port connection pipe Ø	Actuator size Ø	Pilot pressure min.	Operating pressure	Article no.
	DN	[mm]	[mm]	[bar]	[bar]	
ASME BPE						
CF: A, see control functions[1.)]	15	12.7 × 1.65	50(D)	5.2	25	187077
		12.7 × 1.65	70(M)	5.0	25	188726
	20	19.05 × 1.65	50(D)	5.2	16	227607
		19.05 × 1.65	70(M)	5.0	25	188727
	25	25.4 × 1.65	50(D)	5.2	9	227608
		25.4 × 1.65	70(M)	5.0	16	188728
	40	38.1 × 1.65	70(M)	5.0	6	188729
		38.1 × 1.65	90(N)	5.0	16	188730
	50	50.8 × 1.65	90(N)	5.0	10	188731
		50.8 × 1.65	130(P)	5.0	25(20[3.)])	188732
	65	63.5 × 1.65	90(N)	5.0	5	239461
		63.5 × 1.65	130(P)	5.6	16(15[3.)])	239478
CF: B, see control functions[1.)]	15	12.7 × 1.65	50(D)	See diagram[2.)]	25	187082
		12.7 × 1.65	70(M)		25	188740
	20	19.05 × 1.65	50(D)		25	187083
		19.05 × 1.65	70(M)		25	188741
	25	25.4 × 1.65	70(M)		25	188742
	40	38.1 × 1.65	70(M)		25	188781
	50	50.8 × 1.65	70(M)		16	188744
	65	63.5 × 1.65	90(N)		14	239469
		63.5 × 1.65	130(P)		16(15[3.)])	239484
SMS 3008						
CF: A, see control functions[1.)]	15	12 × 1.0	50(D)	5.2	25	187084
		12 × 1.0	70(M)	5.0	25	188745
	20	18 × 1.0	50(D)	5.2	16	227609
		18 × 1.0	70(M)	5.0	25	188746
	25	25 × 1.2	50(D)	5.2	9	227610
		25 × 1.2	70(M)	5.0	16	188747
	40	38 × 1.2	70(M)	5.0	6	188748
		38 × 1.2	90(N)	5.0	16	188749
	50	51 × 1.2	90(N)	5.0	10	188750
		51 × 1.2	130(P)	5.0	25(20[3.)])	188751
	65	63.5 × 1.65	90(N)	5.0	5	239462
		63.5 × 1.65	130(P)	5.6	16(15[3.)])	239477
CF: B, see control functions[1.)]	15	12 × 1.0	50(D)	See diagram[2.)]	25	187089
		12 × 1.0	70(M)		25	188759
	20	18 × 1.0	50(D)		25	187090
		18 × 1.0	70(M)		25	188760
	25	25 × 1.2	70(M)		25	188761
	40	38 × 1.2	70(M)		25	188762
	50	51 × 1.2	70(M)		16	188763
	65	63.5 × 1.65	90(N)		14	239470
		63.5 × 1.65	130(P)		16(15[3.)])	239485

1.) Further information in chapter "2. Circuit functions" on page 4

2.) See diagram in chapter "Pilot pressure diagram with flow direction below seat (Control function B)" on page 13

3.) According to pressure equipment directive 2014/68/EU for compressible fluids of group 1 (dangerous gases and vapours according to article 4, paragraph (1), c), i), first indent)

DTS 1000496323 EN Version: G Status: RL (released | freigegeben | validé) printed: 09.03.2023

bürkert

Valves with flow direction above seat

Control function	Nominal diameter	Port connection pipe Ø	Actuator size Ø	Pilot pressure min.	Operating pressure	Article no.
	DN	[mm]	[mm]	[bar]	[bar]	
EN ISO 1127/ISO 4200						
CF: A, see control functions[1.)]	15	21.3 × 1.6	50(D)	See diagram[2.)]	16	187066
	20	26.9 × 1.6	50(D)		16	187067
	25	33.7 × 2	50(D)		16	187068
	32	42.4 × 2	70(M)		16	188692
	40	48.3 × 2	70(M)		16	188693
	50	60.3 × 2.0	70(M)		12	274663
DIN 11850 R2						
CF: A, see control functions[1.)]	15	19 × 1.5	50(D)	See diagram[2.)]	16	187072
	20	23 × 1.5	50(D)		16	187073
	25	29 × 1.5	50(D)		16	187074
	32	35 × 1.5	70(M)		16	188715
	40	41 × 1.5	70(M)		16	188716
	50	53 × 1.5	70(M)		12	188718
ASME BPE						
CF: A, see control functions[1.)]	15	12.7 × 1.65	50(D)	See diagram[2.)]	16	187078
	20	19.05 × 1.65	50(D)		16	187079
	25	25.4 × 1.65	50(D)		16	187080
	40	38.1 × 1.65	70(M)		16	188736
	50	50.8 × 1.65	70(M)		12	188738
SMS 3008						
CF: A, see control functions[1.)]	15	12 × 1.0	50(D)	See diagram[2.)]	16	187085
	20	18 × 1.0	50(D)		16	187086
	25	25 × 1.2	50(D)		16	187087
	40	38 × 1.2	70(M)		16	188755
	50	51 × 1.2	70(M)		12	188757

1.) Further information in chapter "2. Circuit functions" on page 4

2.) See diagram in chapter "Pilot pressure diagram with flow direction above seat (Control function A)" on page 14

DTS 1000496323 EN Version: G Status: RL (released | freigegeben | validé) printed: 09.03.2023

9.5. Ordering chart clamp connection

Valves with flow direction below seat

Control function	Nominal diameter	Port connection external clamp Ø	Actuator size Ø	Pilot pressure min.	Operating pressure	Article no.
	DN	[mm]	[mm]	[bar]	[bar]	
DIN 32676 B (pipe ISO 4200)						
CF: A, see control functions[1.)]	15	34.0	50(D)	5.2	25	187097
		34.0	70(M)	5.0	25	188783
	20	50.5	50(D)	5.2	16	209437
		50.5	70(M)	5.0	25	188784
	25	50.0	50(D)	5.2	9	227613
		50.5	70(M)	5.0	16	188785
	32	50.5	70(M)	5.0	8.5	188786
		50.5	90(N)	5.0	25	188787
	40	64.0	70(M)	5.0	6	188788
		64.0	90(N)	5.0	16	188789
	50	77.5	90(N)	5.0	10	188790
		77.5	130(P)	5.0	25(20[3.)])	188791
CF: B, see control functions[1.)]	15	34.0	50(D)	See diagram[2.)]	25	187101
		34.0	70(M)		25	188800
	20	50.5	50(D)		25	187102
		50.5	70(M)		25	188801
	25	50.5	70(M)		25	188802
	32	50.5	70(M)		25	188803
	40	64.0	70(M)		25	188804
	50	77.5	70(M)		16	188805
ASME BPE						
CF: A, see control functions[1.)]	15	25.0	50(D)	5.2	25	187103
		25.0	70(M)	5.0	25	188806
	20	25.5	50(D)	5.2	16	227614
		25.5	70(M)	5.0	25	188807
	25	50.5	50(D)	5.2	9	227615
		50.5	70(M)	5.0	16	188808
	40	50.5	70(M)	5.0	6	188809
		50.5	90(N)	5.0	16	188810
	50	64.0	90(N)	5.0	10	188811
		64.0	130(P)	5.0	25(20[3.)])	188812
CF: B, see control functions[1.)]	15	25.0	50(D)	See diagram[2.)]	25	187107
		25.0	70(M)		25	188820
	20	25.0	50(D)		25	187108
		50.5	70(M)		25	188821
	25	50.5	70(M)		25	188822
	40	50.5	70(M)		25	188823
	50	64.0	70(M)		16	188824

1.) Further information in chapter "2. Circuit functions" on page 4

2.) See diagram in chapter "Pilot pressure diagram with flow direction below seat (Control function B)" on page 13

DTS 1000496323 EN Version: G Status: RL (released | freigegeben | validé) printed: 09.03.2023

Further versions on request			
	Approval Food processing, drinking water, oxygen, fuel gases, explosion protection		**Pressure** Other versions for operating pressures up to 25 bar(g) Vacuum version down to -0.9 bar(g)
	Material Seal: NBR, FKM, EPDM		**Temperature** High temperature version up to 230 °C Hot water version up to 200 °C Low temperature version down to -40 °C
	Process connection Clamp connection, welded connection		

Valves with flow direction above seat

Control function	Nominal diameter	Port connection external clamp Ø	Actuator size Ø	Pilot pressure min.	Operating pressure	Article no.
	DN	[mm]	[mm]	[bar]	[bar]	
DIN 32676 B (pipe ISO 4200)						
CF: A, see control functions[1.)]	15	34.0	50(D)	See diagram[2.)]	16	187098
	20	50.5	50(D)		16	187099
	25	50.5	50(D)		16	187100
	32	50.5	70(M)		16	188795
	40	64.0	70(M)		16	188796
	50	77.5	70(M)		12	188798
ASME BPE						
CF: A, see control functions[1.)]	15	25.0	50(D)	See diagram[2.)]	16	187104
	20	25.0	50(D)		16	187105
	25	50.5	50(D)		16	187106
	40	50.5	70(M)		16	188816
	50	64.0	70(M)		12	188818

1.) Further information in chapter "2. Circuit functions" on page 4

2.) See diagram in chapter "Pilot pressure diagram with flow direction above seat (Control function A)" on page 14

DTS 1000496323 EN Version: G Status: RL (released | freigegeben | validé) printed: 09.03.2023

bürkert

Product Enquiry Form - Pneumatic Shut-off Valves ELEMENT

Thank you for your interest in our products! In order to provide you with optimum advice, please fill out the following form and send it to your **Bürkert representative** or E-mail address: info@burkert.com. All information submitted will of course be kept strictly confidential.

Please fill in the **required fields**! *

***Note:** The interactive functions of this PDF may be restricted depending on the PDF reader used.

Personal Information			
Company		**Contact person**	
Customer no.		**Department**	
Street		**Postcode / Town**	
Telephone no.		**E-mail**	

Delivery			
	Quantity		Required delivery date

Operating data				
Function (Function of the control valve in the process / process description)				
Pipeline	DN		PN	
Operating medium				
Type of medium	○ Fluid	○ Steam	○ Gas	
Operating pressure			Unit	
Medium temperature		○ °C / ○ °F		
Ambient temperature		○ °C / ○ °F		

Valve body				
Construction	○ Angle seat valve[1.)]	○ Globe valve		
Actuator material	○ Stainless steel/PPS	○ Stainless steel[1.)]	○ PPS	○ PA
Housing material	○ Stainless steel	○ Gunmetal[1.)]		
Seat seal	○ PTFE ○ EPDM	○ NBR ○ Other	○ PEEK	○ FKM
DN / Nominal pressure	DN	PN		
Flow coefficient	K_V m³/h	C_V GPM(US)		
Connection	○ **Flange**[1.)]	DIN EN 1092-1	ANSI B16.5	JIS 10K
	○ **Thread**	G	NPT	RC
	○ **Weld**[1.)]	DIN EN ISO 1127 / ISO 4200	DIN 11850 2 / DIN 11866 A	ASME BPE
	○ **Clamp**[1.)]	ASME BPE	DIN 32676 A (tube ISO 4200)	DIN 32676 B (tube DIN 11850)
	○ **Other**			

1.) Not available for Type 2006 and 2106.

Valve data			
Circuit Function	○ A: Normally closed	○ B: Normally open	○ I: Double-acting[2.)]
Control pressure	Min.	Max.	

2.) Not available for Type 2006 and 2106.

DTS 1000496323 EN Version: G Status: RL (released | freigegeben | validé) printed: 09.03.2023

Visit this product area on the website ▸

Approvals / Conformities
☐ For use with food (conform to EG regulation no. 1935/2004)
☐ For use with food (conform to FDA)
☐ Explosion protection in accordance with ATEX II 2GD mech. / IECex
☐ European Gas Appliances Directive (EU) 2016/426, DVGW DIN EN 161 and DIN EN 16678
☐ Suitable for drinking water[3.)]
☐ Certificate for the fulfilment of the order EN-ISO 10204 2.1 (Article no. 440788)
☐ Test report EN-ISO 10204 2.2 (Article no. 803722)
☐ Conformity certification for raw material EN-ISO 10204 3.1 (included)

3.) For use with drinking water for medium temperatures up to 85 °C in accordance with the Drinking Water Ordinance §17 and the assessment principles of the Federal Environment Agency.

Additional Requirements / Comment

Send form Delete form

DTS 1000496323 EN Version: G Status: RL (released | freigegeben | validé) printed: 09.03.2023

bürkert

Control heads / pneumatic control for on/off process valves of the ELEMENT series

For actuator size ø70/ø90/ø130 mm	For actuator size ø50 mm
☐ **Control head Type 8691** ▸	☐ **Control head Type 8695** ▸
	

- Inductive position sensor with automatic Teach function
- Coloured high power LEDs
- With/without pilot valve for single or double-acting actuators
- Fieldbus communication
- Hygienic stainless steel design

Pneumatic function Single-acting Double-acting Without pilot valve	**Electrical connection** Cable gland M12 connector
Communication AS-Interface IO-Link Bürkert Systembus (büS)[1.)] Without	**Approvals** ATEX cat. 3GD, IECEx Without

1.) Based on CANopen

For actuator size ø70/ø90/ø130 mm	For actuator size ø50 mm
☐ **Pneumatic control unit / feedback Type 8690** ▸	☐ **Pneumatic control unit / feedback Type 8697** ▸
	

- Visual status indicator
- Micro- or proximity switches for end position feedback
- With/without pilot valve for single- or double-acting actuators
- Optional intrinsically safe version acc. to ATEX / IECEx

Pneumatic function Single-acting Double-acting (Type 8690) Without pilot valve	**Electrical connection** Cable gland M12 connector
Number of position feedback switches 1x 2x	**Approvals** ATEX cat. 3GD, IECEx ATEX cat. 2DG, IECEx Without

Position feedback switch

Micro-switch 24 V DC	Micro-switch 50…225 V DC/AC (Type 8690)	Inductive switch 3-wire PNP
Inductive switch 2-wire NAMUR	Inductive switch 2-wire 24 V DC	Without

Send form Delete form

Visit this product area on the website ▸