DATA SHEET

Type 6013

bürkert
FLUID CONTROL SYSTEMS

Plunger valve 2/2 way direct-acting

- Direct-acting and compact valve up to diameter of DN 6.0
- Vibration-proof, bolted coil system
- Increased leak-tightness with welded plunger guide tube
- Explosion proof versions
- Energy-saving impulse versions

Product variants described in the data sheet may differ from the product presentation and description.

Can be combined with

Type 1087 ▸
Timer

Type 2518 ▸
Cable plug DIN EN 175301-803 - Plug form A

Type 2513 ▸
Cable plug according to DIN EN 175301-803 connector shape A

Type description

Valve 6013 is a direct-acting plunger valve. The stopper and plunger guide tube are welded together to enhance pressure resistance and leak-tightness. Various seal material combinations are available depending on the application. A Bürkert-specific flange design (SFB) enables space-saving arrangement of valves on a manifold. The coils are moulded with polyamide or with chemically resistant epoxy. Pulse coils and 'Kick and Drop' electronics are available for overexcitation (plug 2511) for the reduction of electrical power consumption during operation. Optional manual actuation enables quick commissioning and easy maintenance.

DTS 1000011032 EN Version: AG Status: RL (released | freigegeben | validé) printed: 30.08.2022

บริษัท ฟลูเทค จำกัด
FLU-TECH CO.,LTD
845/3-4 หมู่ 3 ถ.เทพารักษ์ ต.เทพารักษ์ อ.เมือง จ.สมุทรปราการ 10270
845/3-4, Mhoo 3, Theparak Rd., T. Theparak, A. Muang, Samut Prakan, 10270, Thailand
Tel. 02 384 6060, Fax. 02 384 5701 Email sales@flutech.co.th , www.flutech.co.th

Table of contents

1. General technical data 4

2. Product versions 5

2.1. Analytical version ... 5
2.2. DVGW version ... 5

3. Circuit functions 5

4. Approvals 6

5. Materials 6

5.1. Chemical Resistance Chart – Bürkert resistApp ... 6
5.2. Material specifications ... 6
Standard version ... 6
ATEX/IECEx cable version ... 7
ATEX/IECEx version with junction box ... 8

6. Dimensions 9

6.1. Standard version ... 9
6.2. ATEX/IECEx cable version ... 10
6.3. ATEX/IECEx junction box version ... 11
6.4. Manifold mounting ... 12
Single manifold ... 12
Multiple manifold ... 12

7. Performance specifications 13

7.1. Power consumption ... 13
Circuit function A ... 13
Circuit function B ... 13

8. Product installation 14

8.1. Installation notes ... 14
Control for impulse version with polarity reversal control ... 14
Manifolds for block mounting ... 14

9. Product accessories 14

9.1. Cable glands for ATEX/IECEx terminal box ... 14
9.2. Special tool to turn the junction box ... 15

10. Ordering information 15

10.1. Bürkert eShop – Easy ordering and quick delivery ... 15
10.2. Bürkert product filter ... 15
10.3. Ordering chart ... 16
Standard version ... 16
Impulse version ... 17
Analytical version ... 18
DVGW version ... 18
10.4. Ordering chart ATEX/IECEx version ... 19
Cable versions ... 19
Junction box versions ... 19

DTS 1000011032 EN Version: AG Status: RL (released | freigegeben | validé) printed: 30.08.2022

WWW.FLUTECH.CO.TH SALES@FLUTECH.CO.TH + 66 (0) 2384-6060 + 66 (0) 2384-5701

10.5. Ordering chart accessories....20
Cable plug Type 2518, Form A according to DIN EN 175301-803 20
Cable plug Type 2513, Form A according to DIN EN 175301-803 20
Cable glands for ATEX/IECEx terminal box 21
Sub-bases for block mounting 21

DTS 1000011032 EN Version: AG Status: RL (released | freigegeben | validé) printed: 30.08.2022

WWW.FLUTECH.CO.TH SALES@FLUTECH.CO.TH + 66 (0) 2384-6060 + 66 (0) 2384-5701

1. General technical data

Product properties	
Dimensions	Detailed information can be found in chapter "6. Dimensions" on page 9.
Material	
Seal	FKM, PTFE/Graphite (EPDM on request)
Body	Brass, stainless steel 1.4305
Orifice	DN 2.0…DN 6.0
Circuit function	A and B. Detailed information can be found in chapter "3. Circuit functions" on page 5.
Thermal insulation class of solenoid coil	Polyamide class B Epoxy class H
Performance data	
Duty cycle/single valve with block assembly on manifold	100 % continuous rating Intermittent operation 60 % (30 min) or with 5 W coil (on request)
Electrical data	
Operating voltage	
Standard version	24 V DC, 24 V/50 Hz, 230 V/50 Hz
Analytical version	24 V DC, 230 V/50 Hz (other voltages on request)
Voltage tolerance	±10%
Medium data	
Operating medium	
Standard version	Technical vacuum, neutral gases and liquids (e.g. compressed air, water, hydraulic oil)
Analytical version	Neutral medium, which does not attack the body and seal materials (see "5.1. Chemical Resistance Chart – Bürkert resistApp" on page 6)
Medium temperature	
With FKM	-10 °C…+100 °C (PA coil), -10 °C…+120 °C (Epoxy coil)
With PTFE/Graphite	-40 °C…+180 °C (see "5.1. Chemical Resistance Chart – Bürkert resistApp" on page 6)
With FKM, circuit function B	-10 °C…100 °C (AC),…10 °C…120 °C (DC)
Viscosity	Max. 21 mm^2/s
Process/Port connection & communication	
Electrical connection	Tag connector acc. to DIN EN 175301-803 Form A for cable plug Type 2518 (see "10.5. Ordering chart accessories" on page 20) ATEX/IECEx version with 3 m moulded cable
Port connection	
Standard version	G ⅛, G ¼, G ⅜, sub-base (SFB)
Analytical version	G ⅛, G ¼
Approvals and certificates	
Degree of protection	IP65 with cable plug, ATEX/IECEx junction box version and cable connection version
Environment and installation	
Installation position	As required, preferably with actuator upright
Installation instructions	No oils, fats or silicone to be used during installation
Ambient temperature (max.)	+55 °C

DTS 1000011032 EN Version: AG Status: RL (released | freigegeben | validé) printed: 30.08.2022

WWW.FLUTECH.CO.TH SALES@FLUTECH.CO.TH + 66 (0) 2384-6060 + 66 (0) 2384-5701

DTS 1000011032 EN Version: AG Status: RL (released | freigegeben | validé) printed: 30.08.2022

2. Product versions

2.1. Analytical version

Solenoid valves for higher requirements
This version is particularly suitable for switching from extremely pure gaseous medium. All medium-affected parts are submitted to additional purification processes, so that the medium is not contaminated under any circumstances.

The tightness test takes place at the Helium leak detector from a min. of 10^{-4} mbar l/sec.

Product properties	
Material	
Seal	Silicon, oil and fat free version Tightness < 10^{-4} mbar l/s
Body	Brass, stainless steel 1.4305
Medium data	
Operating medium	Neutral medium, which does not attack the body and seal materials (see "5.1. Chemical Resistance Chart – Bürkert resistApp" on page 6)
Process/Port connection & communication	
Electrical connection	Tag connector acc. to DIN EN 175301-803 Form A for cable plug Type 2518 (see "10.5. Ordering chart accessories" on page 20)
Port connection	G ⅛, G ¼
Environment and installation	
Installation instructions	No oils, fats or silicone to be used during installation

2.2. DVGW version

The Type 6013 DVGW solenoid valve is designed primarily as an automatic safety shut-off valve for flammable gases. A strainer is installed in the inlet of the valve.

Product properties	
Material	
Seal	NBR
Body	Brass, stainless steel 1.4305
Circuit function	A. Detailed information can be found in chapter "3. Circuit functions" on page 5.
Performance data	
Operating pressure (max.)	0…5 bar
Medium data	
Operating medium	Flammable gases such as town gas, district gas, liquid gas, hydrogen (see "5.1. Chemical Resistance Chart – Bürkert resistApp" on page 6)
Medium temperature	0 °C…+80 °C
Approvals and certificates	
Standards	DIN EN 161:2013; DIN EN 13611:2015
Environment and installation	
Ambient temperature (max.)	0 °C… +55 °C

3. Circuit functions

Circuit functions	Description
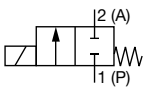	**Type: A, solenoid valve** 2/2 way Direct-acting Normally closed
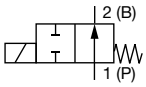	**Type: B, solenoid valve** 2/2 way Direct-acting Normally opened

WWW.FLUTECH.CO.TH SALES@FLUTECH.CO.TH + 66 (0) 2384-6060 + 66 (0) 2384-5701

4. Approvals

ATEX and IECEx approval for coils with fixed cable outlet	
ATEX: EPS 18 ATEX 1232 X II 2G Ex mb IIC T4 Gb II 2D Ex mb IIIC T130 °C Db	IECEx: IECEx EPS 18.0110X Ex mb IIC T4 Gb Ex mb IIIC T130 °C Db

5. Materials

5.1. Chemical Resistance Chart – Bürkert resistApp

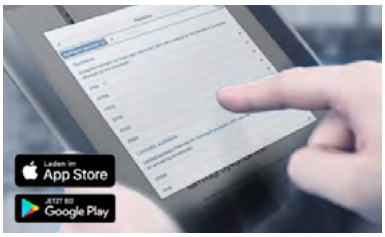

Bürkert resistApp – Chemical Resistance Chart

You want to ensure the reliability and durability of the materials in your individual application case? Verify your combination of media and materials on our website or in our resistApp.

Start Chemical Resistance Check

5.2. Material specifications

Standard version

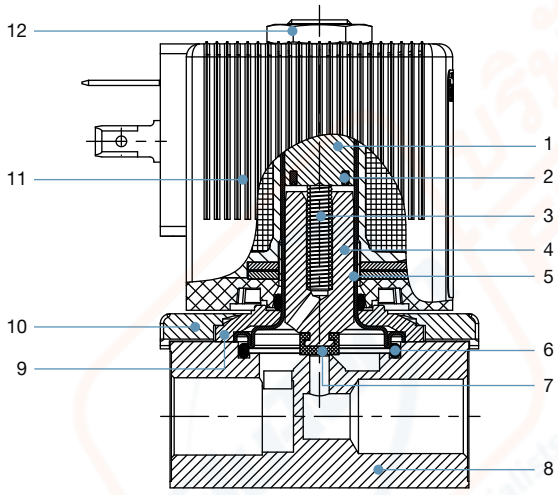

No.	Element	Material
1	Stopper	Stainless steel 1.4105
2	Shading ring	Cu (brass version) Ag (stainless steel version)
3	Spring	Stainless steel 1.4310
4	Magnetic core	Stainless steel 1.4105
5	Armature guide tube	Stainless steel 1.4303
6	Seal	FKM Graphite (high temp. version)
7	Armature seal	FKM PTFE (high temp. version)
8	Valve body	Brass Stainless steel 1.4305
9	Sub-base	Steel, surface finish thick-film passivated (brass version) Stainless steel 1.4301 (stainless steel version)
10	Cover	Polyamide
11	Coil	PA (polyamide) Epoxy (high temp. version)
12	Locknut	Steel, surface finish thick-film passivated (brass version) Stainless steel 1.4305 PTFE coated (stainless steel version)

DTS 1000011032 EN Version: AG Status: RL (released | freigegeben | validé) printed: 30.08.2022

WWW.FLUTECH.CO.TH SALES@FLUTECH.CO.TH + 66 (0) 2384-6060 + 66 (0) 2384-5701

ATEX/IECEx cable version

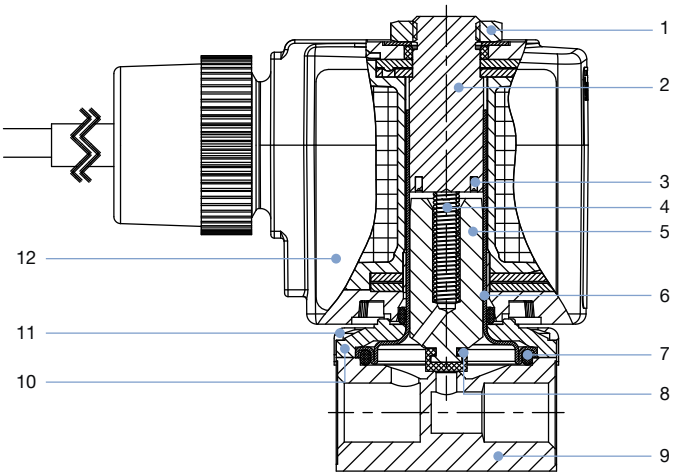

No.	Element	Material
1	Locknut	Steel, surface finish thick-film passivated (brass version) Stainless steel 1.4305 PTFE coated (stainless steel version)
2	Stopper	Stainless steel 1.4105
3	Shading ring	Cu (brass version) Ag (stainless steel version)
4	Spring	Stainless steel 1.4310
5	Magnetic core	Stainless steel 1.4105
6	Armature guide tube	Stainless steel 1.4303
7	Seal	FKM Graphite (high temp. version)
8	Armature seal	FKM PTFE (high temp. version)
9	Valve body	Brass Stainless steel 1.4305
10	Sub-base	Steel, surface finish thick-film passivated (brass version) Stainless steel 1.4301 (stainless steel version)
11	Cover	Polyamide
12	Coil	Epoxy

DTS 1000011032 EN Version: AG Status: RL (released | freigegeben | validé) printed: 30.08.2022

WWW.FLUTECH.CO.TH SALES@FLUTECH.CO.TH + 66 (0) 2384-6060 + 66 (0) 2384-5701

ATEX/IECEx version with junction box

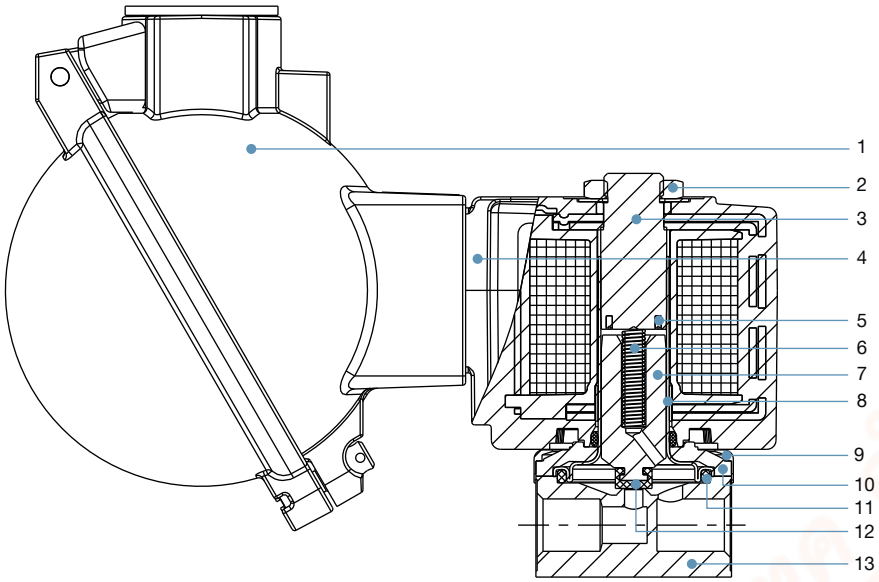

No.	Element	Material
1	Junction box	Aluminium
2	Locknut	Steel, surface finish thick-film passivated (brass version) Stainless steel 1.4305 PTFE coated (stainless steel version)
3	Stopper	Stainless steel 1.4105
4	Coil	Epoxy
5	Shading ring	Cu (brass version) Ag (stainless steel version)
6	Spring	Stainless steel 1.4310
7	Magnetic core	Stainless steel 1.4105
8	Armature guide tube	Stainless steel 1.4303
9	Cover	Polyamide
10	Sub-base	Steel, surface finish thick-film passivated (brass version) Stainless steel 1.4301 (stainless steel version)
11	Seal	FKM Graphite (high temp. version)
12	Armature seal	FKM PTFE (high temp. version)
13	Valve body	Brass Stainless steel 1.4305

DTS 1000011032 EN Version: AG Status: RL (released | freigegeben | validé) printed: 30.08.2022

WWW.FLUTECH.CO.TH SALES@FLUTECH.CO.TH + 66 (0) 2384-6060 + 66 (0) 2384-5701

6. Dimensions

6.1. Standard version

Note:
Dimensions in mm

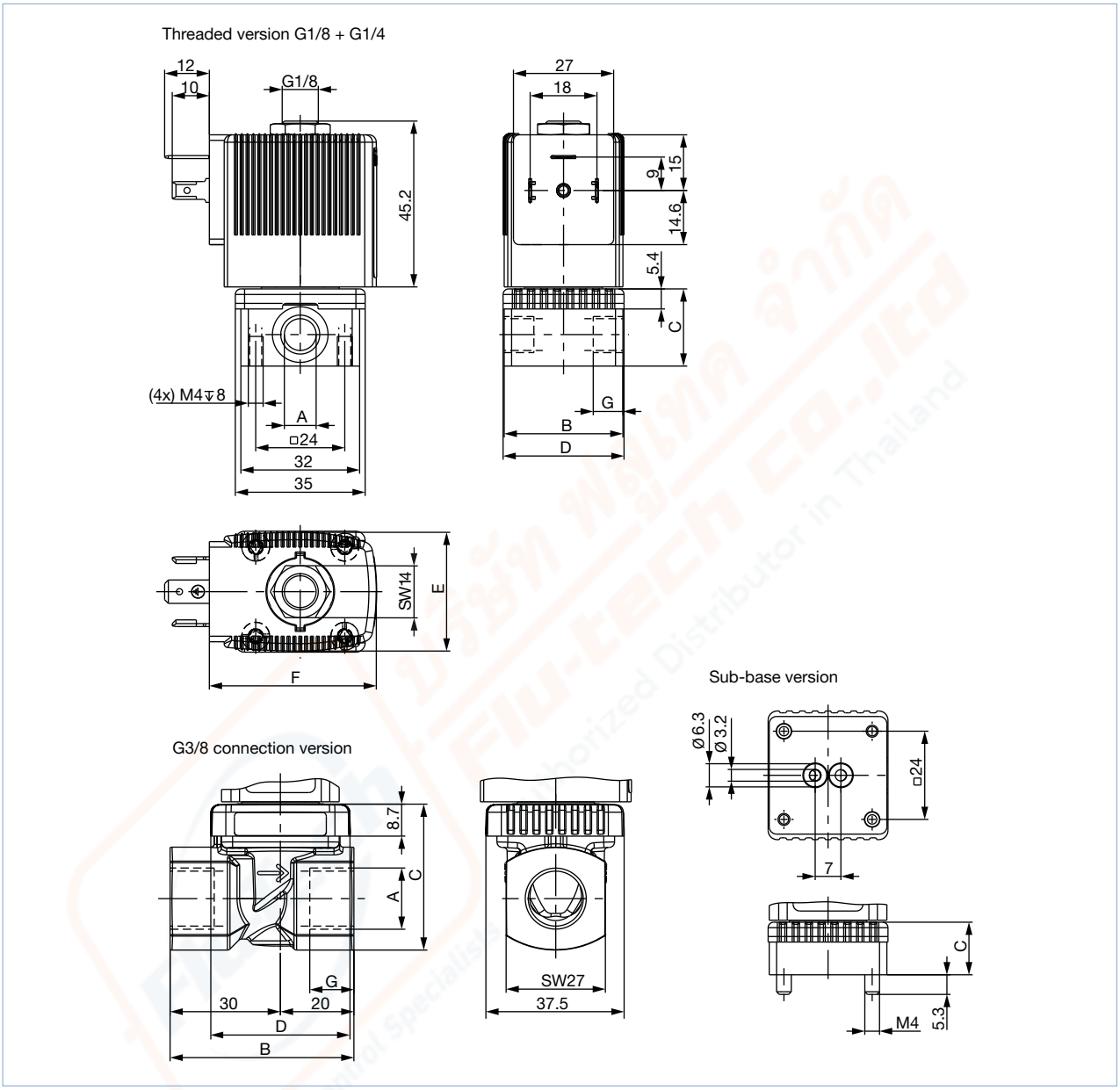

Port connection	A	B	C	D	G
	[inch]	[mm]	[mm]	[mm]	[mm]
Threaded version	G ⅛	32	20.8	32.6	8
	G ¼	46	26.8	49	12
	G ⅜	50	39.8	38	12
Sub-base version	–	32	14.3	32.6	–

Coil size	E	F
	[mm]	[mm]
8	32	45
10	40	51

DTS 1000011032 EN Version: AG Status: RL (released | freigegeben | validé) printed: 30.08.2022

WWW.FLUTECH.CO.TH SALES@FLUTECH.CO.TH + 66 (0) 2384-6060 + 66 (0) 2384-5701

6.2. ATEX/IECEx cable version

Note:
Dimensions in mm

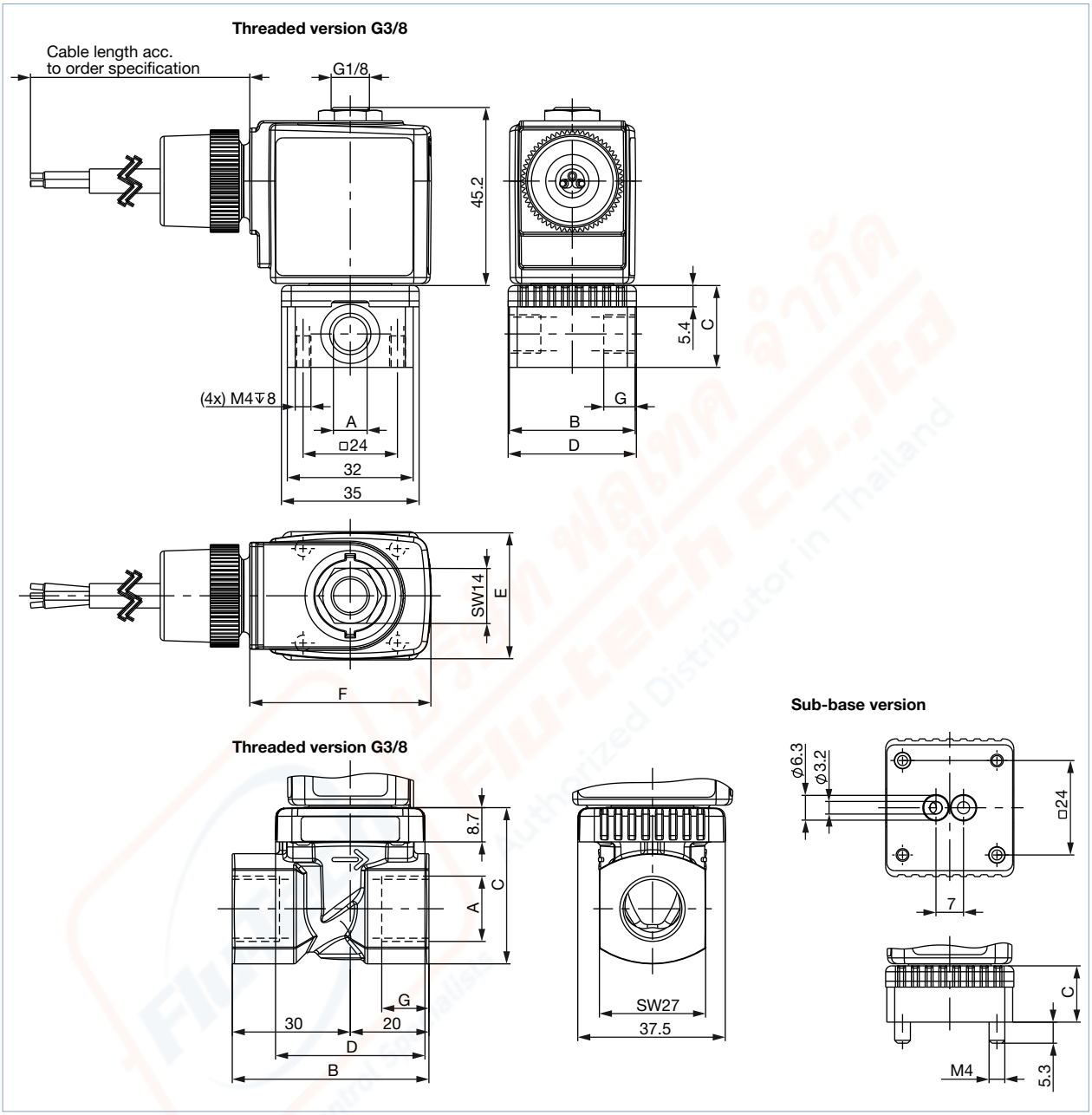

Port connection	A	B	C	D	G
	[inch]	[mm]	[mm]	[mm]	[mm]
Threaded version	G ⅛	32	20.8	32.6	8
	G ¼	46	26.8	49	12
	G ⅜	50	39.8	38	12
Sub-base version	–	32	14.3	32.6	–

Coil size	E	F
	[mm]	[mm]
5	32	46
6	40	52

WWW.FLUTECH.CO.TH SALES@FLUTECH.CO.TH + 66 (0) 2384-6060 + 66 (0) 2384-5701

6.3. ATEX/IECEx junction box version

Note:
Dimensions in mm

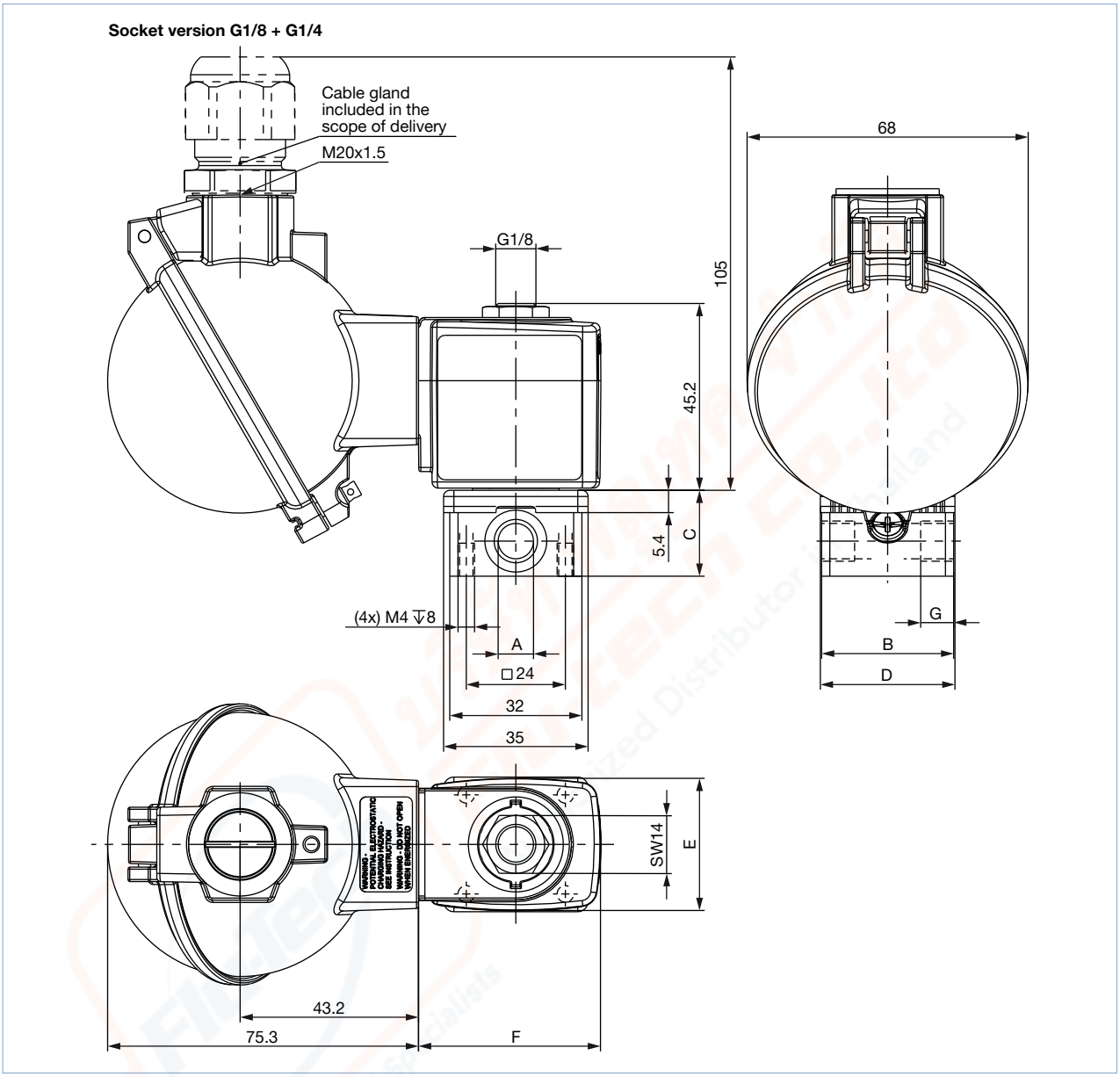

Port connection	A	B	C	D	H
	[inch]	[mm]	[mm]	[mm]	[mm]
Threaded version	G ⅛	32	20.8	32.6	8
	G ¼	46	26.8	49	12
	G ⅜	50	39.8	38	12
Sub-base version	–	32	14.3	32.6	–

Coil size	E	F
	[mm]	[mm]
5	32	44
6	40	51

WWW.FLUTECH.CO.TH SALES@FLUTECH.CO.TH + 66 (0) 2384-6060 + 66 (0) 2384-5701

6.4. Manifold mounting

Single manifold

Note:

- Dimensions in mm
- For detailed information on the installation of manifolds, see “Manifolds for block mounting” on page 14.

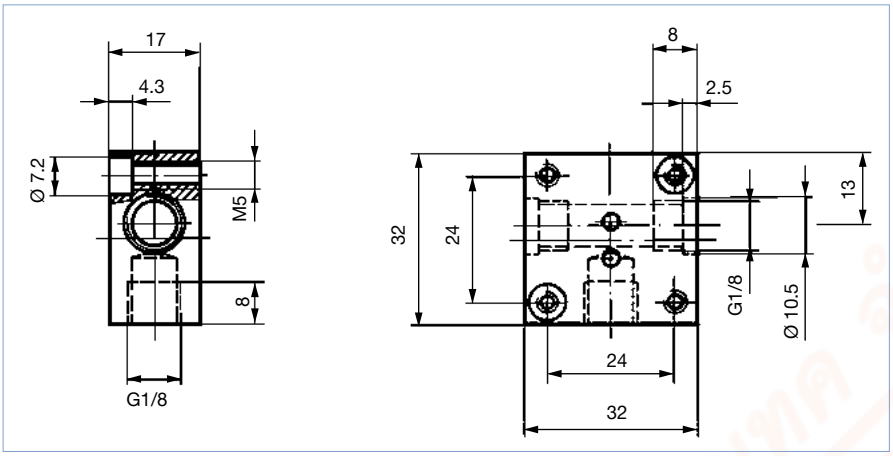

Multiple manifold

Note:

- Dimensions in mm
- Manifold only possible with coil size 5
- Brass or stainless steel manifold on request

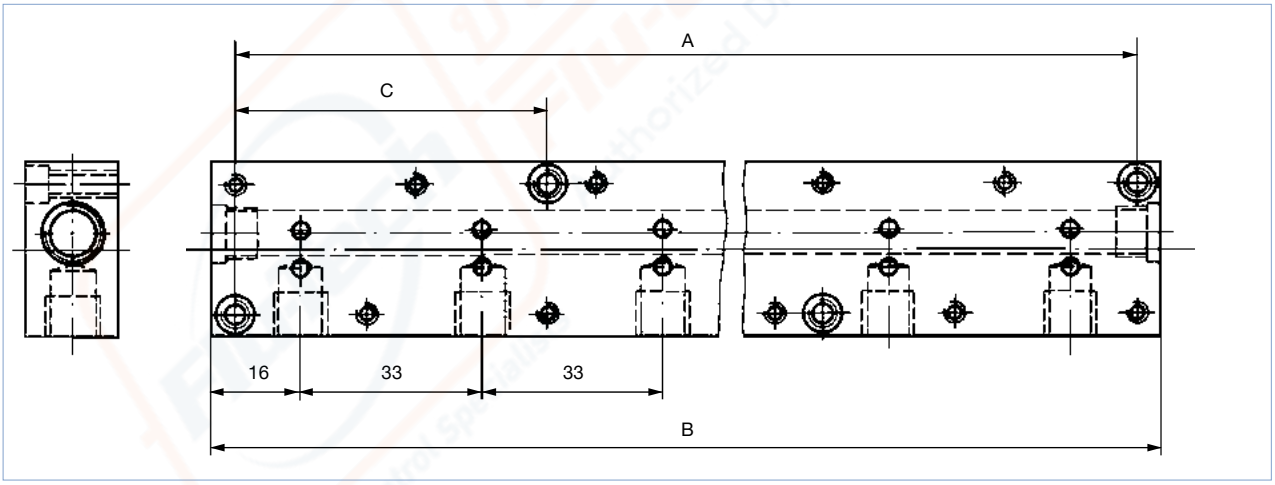

Accessory part	Quantity of valve places	Hole spacing A [mm]	Total length B [mm]	Hole spacing C [mm]	Article no.
Multiple manifold (in aluminium)	2	57	65	–	005023
	3	90	98	–	005286
	4	123	131	–	005287
	5	156	164	57	005035
	6	189	197	57	005038
	8	255	263	90	005386
	10	321	329	90	005764
Single manifold (in aluminium)					005020

DTS 1000011032 EN Version: AG Status: RL (released | freigegeben | validé) printed: 30.08.2022

WWW.FLUTECH.CO.TH SALES@FLUTECH.CO.TH + 66 (0) 2384-6060 + 66 (0) 2384-5701

Accessory part	Quantity of valve places	Hole spacing A [mm]	Total length B [mm]	Hole spacing C [mm]	Article no.
Connector nipple with O-ring to connect from manifold					005040
Covering plate with screws and O-ring for locking unoccupied valve positions					005630

7. Performance specifications

7.1. Power consumption

Circuit function A

Orifice [mm]	Port connection	K_v value water [m³/h]	Weight [g]	Power consumption[1.] [W]	Electr. power Inrush (AC)	Electr. power Hold (AC)	Coil size	Switching times Opening [ms]	Switching times Closing [ms]
2.0	G ⅛	0.12	325	8 W AC or 8 W DC (9)	24 VA	17 VA	5 (32 mm)	20	30
2.0	G ¼	0.12	465	8 W AC or 8 W DC (9)	24 VA	17 VA	5 (32 mm)	20	30
2.0	Sub-base	0.12	290	8 W AC or 8 W DC (9)	24 VA	17 VA	5 (32 mm)	20	30
2.5	G ⅛	0.16	325	8 W AC or 8 W DC (9)	24 VA	17 VA	5 (32 mm)	20	30
2.5	G ¼	0.16	465	8 W AC or 8 W DC (9)	24 VA	17 VA	5 (32 mm)	20	30
3.0	G ⅛	0.23	325	8 W AC or 8 W DC (9)	24 VA	17 VA	5 (32 mm)	20	30
3.0	G ¼	0.23	465	8 W AC or 8 W DC (9)	24 VA	17 VA	5 (32 mm)	20	30
3.0	G ⅜	0.23	550	10 W AC or 10 W DC (11)	30 VA	22 VA	6 (40 mm)	20	30
4.0	G ¼	0.30	465	8 W AC or 8 W DC (9)	24 VA	17 VA	5 (32 mm)	20	30
4.0	G ⅜	0.30	550	10 W AC or 10 W DC (11)	30 VA	22 VA	6 (40 mm)	20	30
6.0	G ¼	0.55	465	8 W AC or 8 W DC (9)	24 VA	17 VA	5 (32 mm)	20	30
6.0	G ⅜	0.55	550	10 W AC or 10 W DC (11)	30 VA	22 VA	6 (40 mm)	20	30

1.) Values in brackets correspond to a coil temperature of 20 °C.

Circuit function B

Orifice [mm]	Port connection	K_v value water [m³/h]	Weight [g]	Power consumption[1.] [W]	Electr. power Inrush (AC)	Electr. power Hold (AC)	Coil size	Switching times Opening [ms]	Switching times Closing [ms]
2.00	G ⅛	0.12	325	7 W AC or 8 W DC (9)	24 VA	17 VA	5 (32 mm)	20	30
2.00	G ¼	0.12	465	7 W AC or 8 W DC (9)	24 VA	17 VA	5 (32 mm)	20	30
2.00	Sub-base	0.12	290	7 W AC or 8 W DC (9)	24 VA	17 VA	5 (32 mm)	20	30
3.00	G ⅛	0.23	325	7 W AC or 8 W DC (9)	24 VA	17 VA	5 (32 mm)	20	30
3.00	G ¼	0.23	465	7 W AC or 8 W DC (9)	24 VA	17 VA	5 (32 mm)	20	30
3.00	Sub-base	0.23	290	7 W AC or 8 W DC (9)	24 VA	17 VA	5 (32 mm)	20	30
4.00	G ¼	0.3	465	7 W AC or 8 W DC (9)	24 VA	17 VA	5 (32 mm)	20	30
6.00	G ¼	0.55	465	7 W AC or 8 W DC (9)	24 VA	17 VA	5 (32 mm)	20	30

1.) Values in brackets correspond to a coil temperature of 20 °C.

DTS 1000011032 EN Version: AG Status: RL (released | freigegeben | validé) printed: 30.08.2022

WWW.FLUTECH.CO.TH SALES@FLUTECH.CO.TH + 66 (0) 2384-6060 + 66 (0) 2384-5701

8. Product installation

8.1. Installation notes

Control for impulse version with polarity reversal control

Note:

- Please use only the cable plug without electrical circuitry for the impulse version!
- Pulse duration at least 50 ms

Polarity (is marked on the coil with a label)	**Features**	**Terminal connections**
– switch ON +	valve open	(+) on terminal 2 and (–) on terminal 1 (see below)
+ switch OFF –	valve closed	(+) on terminal 1 and (–) on terminal 2 (see below)

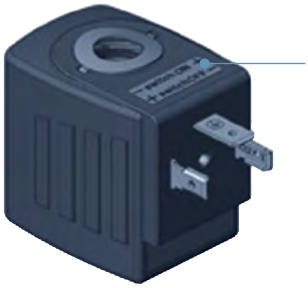

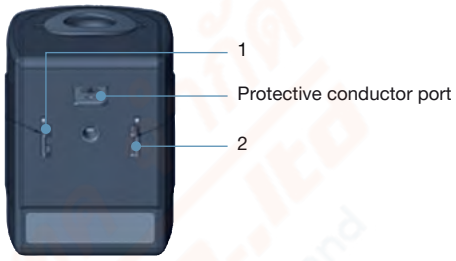

Manifolds for block mounting

Note:

- Unused, open valve ports must be closed off with covering plates (see accessories).
- Manifold should be fixed on to a rail.
- For detailed information on dimensions "6.4. Manifold mounting" on page 12.

With manifold mounting, please comply with the permissible duty cycle (5 W models with 100 % continuous rating or standard 8 W model with 60 % duty cycle). The pressure port for the manifold is designated with P (R), and the outlet port with A (B). Only connect together ports with the same designation.

2/2 way valves of Type 6013 can be operated together on a manifold with 3/2 way valves of Type 6014, circuit function C (not D or T!) if the operating pressures matches according to the rating plates. The manifolds can also be expanded if the valve functions are taken into consideration. Connector nipples with O-rings are used to connect the P (R) ports.

9. Product accessories

9.1. Cable glands for ATEX/IECEx terminal box

Note:

- A cable gland in polyamide version is included in the delivery. A nickel-plated brass version can be ordered at a surcharge.
- This special tool is not supplied with the valve (see "10.5. Ordering chart accessories" on page 20).

Description	**Ex approvals**		**Dimensions**	
	Certification	**Identification**		
Ex cable gland, Brass, nickel-plated, 6…13 mm	PTB 04 ATEX 1112 X, IECEx PTB 13.0027X	II 2 G Ex e IIC Gb, II 2 D Ex tb IIIC Db IP68	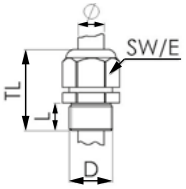	TL 29…37 mm L 6 mm D 20 mm SW 24 mm E 27 mm

DTS 1000011032 EN Version: AG Status: RL (released | freigegeben | validé) printed: 30.08.2022

WWW.FLUTECH.CO.TH SALES@FLUTECH.CO.TH + 66 (0) 2384-6060 + 66 (0) 2384-5701

Description	Ex approvals		Dimensions	
	Certification	Identification		
Ex cable gland, Polyamide, 7…13 mm 	PTB 13 ATEX 1015 X, IECEx PTB 13.0034X	II 2 G Ex e IIC Gb, II 2 D Ex tb IIIC Db IP68	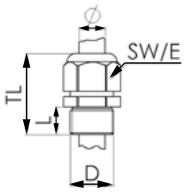	TL 36…45 mm L 10 mm D 20 mm SW 24 mm E 28 mm

9.2. Special tool to turn the junction box

Note:

- This special tool is not supplied with the valve (see "10.5. Ordering chart accessories" on page 20).
- This special tool can only be used with ATEX AC10 coils.

Description	Components of the set
Set SC02-AC10 	• Special wrench • Service manual

10. Ordering information

10.1. Bürkert eShop – Easy ordering and quick delivery

Bürkert eShop – Easy ordering and fast delivery

You want to find your desired Bürkert product or spare part quickly and order directly? Our online shop is available for you 24/7. Sign up and enjoy all the benefits.

Order online now

10.2. Bürkert product filter

Bürkert product filter – Get quickly to the right product

You want to select products comfortably based on your technical requirements? Use the Bürkert product filter and find suitable articles for your application quickly and easily.

Try out our product filter

DTS 1000011032 EN Version: AG Status: RL (released | freigegeben | validé) printed: 30.08.2022

WWW.FLUTECH.CO.TH SALES@FLUTECH.CO.TH + 66 (0) 2384-6060 + 66 (0) 2384-5701

10.3. Ordering chart

Standard version

Note:
Please note that the cable plug has to be ordered separately, see "10.5. Ordering chart accessories" on page 20 or separate datasheet **Type 2518** ▶.

Circuit function	Orifice [mm]	Port connection	K_v value water[1.] [m³/h]	Coil power [W]	Pressure range[2.] [bar]	Voltage/ Frequency [V/Hz]	Article no. Brass body FKM Seal	Article no. Stainless steel body FKM Seal
With FKM seal, brass or stainless steel body (class B)								
A, solenoid valve 2/2 way Direct-acting Normally closed 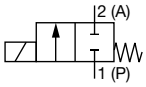 	2.0	G ⅛	0.12	8	0…12	024/DC	134237	134233
					0…25	024/50	132865	134234
					0…25	230/50	134239	134236
		G ¼	0.12	8	0…12	024/DC	137537	137533
					0…25	024/50	137538	137534
					0…25	230/50	137540	137536
		Sub-base (SFB)	0.12	8	0…12	024/DC	134244	–
					0…25	024/50	134245	–
					0…25	230/50	20022979	–
	2.5	G ⅛	0.16	8	0…10	024/DC	134240	–
					0…16	024/50	134241	–
					0…16	230/50	134243	–
	3.0	G ⅛	0.23	8	0…6	024/DC	126091	126078
					0…10	024/50	126092	126079
					0…10	230/50	126094	126081
		G ¼	0.23	8	0…6	024/DC	125301	125317
					0…10	024/50	125302	126082
					0…10	230/50	125304	126084
		G ⅜	0.23	10	0…8	024/DC	134248	–
					0…14	024/50	134249	–
					0…14	230/50	134251	–
	4.0	G ¼	0.30	8	0…1.5	024/DC	125306	125318
					0…4	024/50	125307	125319
					0…4	230/50	125309	125320
		G ⅜	0.30	10	0…2.5	024/DC	134252	–
					0…6	024/50	134253	–
					0…6	230/50	134255	–
	6.0	G ¼	0.55	8	0…0.5	024/DC	125311	126086
					0…1.5	024/50	125312	126087
					0…1.5	230/50	125314	126089
		G ⅜	0.55	10	0…0.75	024/DC	134256	–
					0…2.5	024/50	134257	–
					0…2.5	230/50	134259	–

DTS 1000011032 EN Version: AG Status: RL (released | freigegeben | validé) printed: 30.08.2022

WWW.FLUTECH.CO.TH SALES@FLUTECH.CO.TH + 66 (0) 2384-6060 + 66 (0) 2384-5701

Circuit function	Orifice [mm]	Port connection	K_v value water[1.] [m³/h]	Coil power [W]	Pressure range[2.] [bar]	Voltage/ Frequency [V/Hz]	Article no.
For high temperature applications (-40 °C...+180 °C), PTFE seat seal, brass body (class H)							
A, solenoid valve 2/2 way Direct-acting Normally closed 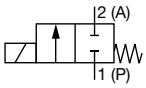	2.0	G ¼	0.12	8	0...12	024/DC	136015
					0...25	024/50	136016
					0...25	230/50	136018
	3.0	G ¼	0.23	10	0...6	024/DC	136019
					0...10	024/50	136020
					0...10	230/50	136022
		G ⅜	0.23	10	0...8	024/DC	136023
					0...14	024/50	136024
					0...14	230/50	136026

1.) Measured at +20 °C, 1 bar[2.] pressure at valve inlet and free outlet.

2.) Measured as overpressure to the atmospheric pressure.

Circuit function	Orifice [mm]	Port connection	K_v value water[1.] [m³/h]	Coil power [W]	Pressure range[2.] [bar]	Voltage/ Frequency [V/Hz]	Article no.
With FKM seal and brass body (class H)							
B, solenoid valve 2/2 way Direct-acting Normally opened 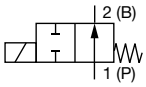	2.0	G ⅛	0.12	8	0...16	24/DC	213543
				7		230/50	213550
	3.0	G ⅛	0.23	8	0...8	24/DC	213545
				7		230/50	213551
		G ¼	0.23	8	0...8	24/DC	213546
				7		230/50	213552
	4.0	G ¼	0.3	8	0...4	024/DC	213548
				7		230/50	213553
	6.0	G ¼	0.55	8	0...2	024/DC	213549
				7		230/50	213554

1.) Measured at +20 °C, 1 bar[2.] pressure at valve inlet and free outlet.

2.) Measured as overpressure to the atmospheric pressure.

Impulse version

Note:
Please note that the cable plug has to be ordered separately, see "10.5. Ordering chart accessories" on page 20 or separate datasheet **Type 2518** ▸.

Circuit function	Orifice [mm]	Port connection	K_v value water[1.] [m³/h]	Pressure range[2.] [bar]	Power consumption DC (hot/cold coil) [W]	Article no. per voltage [V] 012/DC	024/DC
With FKM seal and brass body (class H)							
A, solenoid valve 2/2 way Direct-acting Normally closed 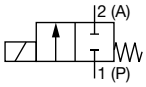	2.0	Sub-base (SFB)	0.12	0...16	7	209266	209272
	2.5		0.16	0...10	7	209267	209273
	3.0		0.23	0...6	7	209268	209274
	2.0	G ⅛	0.12	0...16	7	209269	209275
	2.5		0.16	0...10	7	209270	209276
	3.0		0.23	0...6	7	209271	209277

1.) Measured at +20 °C, 1 bar[2.] pressure at valve inlet and free outlet.

2.) Measured as overpressure to the atmospheric pressure.

DTS 1000011032 EN Version: AG Status: RL (released | freigegeben | validé) printed: 30.08.2022

WWW.FLUTECH.CO.TH SALES@FLUTECH.CO.TH + 66 (0) 2384-6060 + 66 (0) 2384-5701

Analytical version

Note:
Please note that the cable plug has to be ordered separately, see "10.5. Ordering chart accessories" on page 20 or separate datasheet **Type 2518** ▶.

Circuit function	Orifice	Port connection	K_V value water[1.]	Coil power	Pressure range[2.]	Voltage/ Frequency	Article no.
	[mm]		[m³/h]	[W]	[bar]	[V/Hz]	
With FKM seal and brass body (class B)							
A, solenoid valve 2/2 way Direct-acting Normally closed 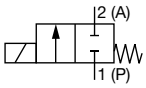	2.0	G ⅛	0.12	8	0…12	24/DC	137826
					0…25	230/50	137827
	2.5	G ⅛	0.16	8	0…10	24/DC	137828
					0…16	230/50	137829
	3.0	G ¼	0.23	8	0…6	24/DC	137830
					0…10	230/50	137831
	4.0	G ¼	0.30	8	0…1.5	24/DC	137832
					0…4	230/50	137833
With FKM seal and stainless steel body (class B)							
A, solenoid valve 2/2 way Direct-acting Normally closed 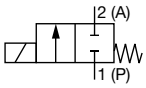	2.0	G ⅛	0.12	8	0…12	24/DC	137818
					0…25	230/50	137819
	2.0	G ¼	0.12	8	0…12	24/DC	137820
					0…25	230/50	137821
	3.0	G ¼	0.23	8	0…6	24/DC	137822
					0…10	230/50	137823
	4.0	G ¼	0.30	8	0…1.5	24/DC	137824
					0…4	230/50	137825

1.) Measured at +20 °C, 1 bar[2.] pressure at valve inlet and free outlet.

2.) Measured as overpressure to the atmospheric pressure.

DVGW version

Circuit function	Orifice	Port connection	K_V value water[1.]	Coil power	Pressure range[2.]	Voltage/ Frequency	Article no.
	[mm]		[m³/h]	[W]	[bar]	[V/Hz]	
With NBR seal, brass body (class B)							
A, solenoid valve 2/2 way Direct-acting Normally closed 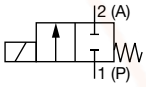	3.0	G ¼	0.23	8	0…5	24/DC	258362
					0…5	230/50	296548
	4.0	G ¼	0.3	8	0…1.5	24/DC	258361
					0…4	230/50	296549
	6.0	G ¼	0.55	8	0…0.5	24/DC	266293
					0…1.5	230/50	301072

1.) Measured at +20 °C, 1 bar[2.] pressure at valve inlet and free outlet.

2.) Measured as overpressure to the atmospheric pressure.

DTS 1000011032 EN Version: AG Status: RL (released | freigegeben | validé) printed: 30.08.2022

WWW.FLUTECH.CO.TH SALES@FLUTECH.CO.TH + 66 (0) 2384-6060 + 66 (0) 2384-5701

10.4. Ordering chart ATEX/IECEx version

Cable versions

Note:

- The maximum fluid temperature must not in any case exceed the permissible temperature class (T4 135 °C, 100 °C T5, T6 85 °C), minus 5 K).
- With 3 m cable as standard. Other lengths on request.

Circuit function	Orifice	Port connection	K_v value water[1.]	Coil power	Pressure range[2.]	Voltage/ Frequency	Article no.	
	[mm]		[m³/h]	[W]	[bar]	[V/Hz]	Brass body	Stainless steel body
Ex m T4 approved, with FKM seal and molded cable (3 m), single mounting only								
A, solenoid valve 2/2 way Direct-acting Normally closed 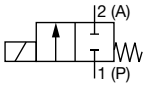	2.0	Sub-base (SFB)	0.11	7	0…6	24/UC	351923	351915
						230/UC	364417	x
		G ⅛	0.12	9	0…10	24/UC	351895	351900
						230/UC	x	351926
		G ¼	0.12	9	0…10	24/UC	351909	351901
						230/UC	351920	351914
	2.5	G ⅛	0.16	9	0…8	24/UC	364430	x
						230/UC	x	x
	3.0	G ⅛	0.23	9	0…5	24/UC	x	351933
						230/UC	x	x
		G ¼	0.23	9	0…5	24/UC	351896	351899
						230/UC	351925	351936
A, solenoid valve 2/2 way Direct-acting Normally closed	4.0	G ¼	0.30	9	0…1.2	24/UC	351921	364523
						230/UC	x	364528
	6.0	G ¼	0.55	9	0…0.4	24/UC	351902	351948
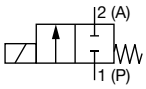						230/UC	364517	x

x: on request

Junction box versions

Note:
The maximum fluid temperature must not in any case exceed the permissible temperature class (T4 135 °C, 100 °C T5, T6 85 °C), minus 5 K.

Circuit function	Orifice	Port connection	K_v value water[1.]	Coil power	Pressure range[2.]	Voltage/ Frequency	Article no.	
	[mm]		[m³/h]	[W]	[bar]	[V/Hz]	Brass body	Stainless steel body
Ex m T4 approved, with FKM seal and molded cable (3 m), single mounting only								
A, solenoid valve 2/2 way Direct-acting Normally closed 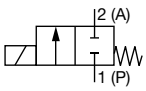	1.5	Sub-base (SFB)	0.08	9	0…16	24/UC	364529	x
	2	G ⅛	0.12		0…10	24/UC	351938	351953
						230/UC	364533	364537
		G ¼				24/UC	351944	351917
						230/UC	364538	351929

DTS 1000011032 EN Version: AG Status: RL (released | freigegeben | validé) printed: 30.08.2022

WWW.FLUTECH.CO.TH SALES@FLUTECH.CO.TH + 66 (0) 2384-6060 + 66 (0) 2384-5701

Circuit function	Orifice	Port connection	K_V value water[1.]	Coil power	Pressure range[2.]	Voltage/ Frequency	Article no.	
	[mm]		[m³/h]	[W]	[bar]	[V/Hz]	Brass body	Stainless steel body
A, solenoid valve 2/2 way Direct-acting Normally closed 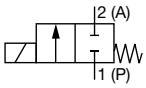	3	G ⅛	0.23	9	0…5	24/UC	364540	x
						230/UC	x	x
		G ¼				24/UC	x	351906
						230/UC	x	364541
	4		0.3		0…1.2	24/UC	351941	364544
						230/UC	x	364548
	6		0.55		0…0.4	24/UC	364551	364554
						230/UC	364555	364556

x: on request

10.5. Ordering chart accessories

Cable plug Type 2518, Form A according to DIN EN 175301-803

Note:
Further versions see data sheet **Type 2518** ▶.

Cable plug	Dimensions	Version	Voltage	Article no.
	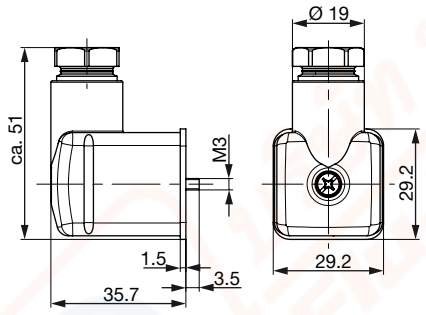	Without circuitry (AC/DC)	0…250 V AC/DC	314802
		With LED (AC/DC)	12…24 V AC/DC	314812
		With LED and varistor (AC/DC)	12…24 V AC/DC	314820
		With rectifier, LED and varistor	12…24 V AC/DC	314816

Cable plug Type 2513, Form A according to DIN EN 175301-803

Note:

- The Cable plug Type 2513 meets the requirements of ATEX category 3 GD.
- For more information on the cable plug, see data sheet **Type 2513** ▶.

Cable plug	Circuit diagram	Cable length [mm]	Article no.
	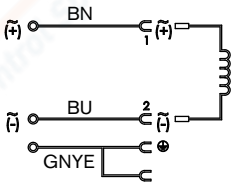	12000	260893
		5000	260892
		3000	260891
		300	260890

DTS 1000011032 EN Version: AG Status: RL (released | freigegeben | validé) printed: 30.08.2022

WWW.FLUTECH.CO.TH SALES@FLUTECH.CO.TH + 66 (0) 2384-6060 + 66 (0) 2384-5701

Cable glands for ATEX/IECEx terminal box

Note:

- A polyamide cable gland version is included in the delivery. A nickel-plated brass version can be ordered at surcharge.
- For more information on Ex cable glands see "6.1. Cable glands for ATEX/IECEx terminal box" on page 12.
- For further information on the special key see "9.2. Special tool to turn the junction box" on page 15.

Description	Article no.
Ex cable gland, brass, nickel-plated, 6…13 mm[1.]	773278
Ex cable gland, polyamide, 7…13 mm[1.]	773277
Set SC02-AC10: Special wrench[2.] incl. service manual	293488

1.) Cable diameter

2.) Not included in the scope of delivery of the valve

Further versions on request			
	Approval • UL / UR / CSA • UL Hazloc Div 2 • FM Hazloc Div 1 • European gas approval Class A, Group 2		**Pressure** Variants with increased coil power for higher medium pressure
			Process connection Threaded port NPT, Rc
	Material Seal material EPDM		**Voltage** Further voltages

Sub-bases for block mounting

Note:
The ordering table for sub-plates can be found in chapter "6.4. Manifold mounting" on page 12.

DTS 1000011032 EN Version: AG Status: RL (released | freigegeben | validé) printed: 30.08.2022

WWW.FLUTECH.CO.TH SALES@FLUTECH.CO.TH + 66 (0) 2384-6060 + 66 (0) 2384-5701