Series 1200 Steel line

General

The 12X stainless steel ISO 6432 microbore cylinders series are designed for corrosion resistance application such as marine, pharmaceutical and food ambiences.
The pre lubrication grease used is NSF H1 certified for food application.
Specific care has been taken during the design stages and the result is a clean profile cylinder easy to clean and free from possible residue build-up areas. All parts in contact with the external environment are in Stainless steel 316L and the seals are available in three different compounds for different temperature applications:
PUR -30C° - +80C°, FPM -5°C - +150°C and NBR -5°C - +70°C.
The range starts from 16 bore up to 63 bore, double acting version standard or with through rod, magnetic or not magnetic piston available.
The end caps are crimped onto the barrel for bore sizes 16 to 25 and screwed on the barrel from 32 to 63 bore.
Depending on the type of mounting required it is possible to choose different end caps style.
The piston is aluminium and the sensor bracket, when required is in stainless steel 316 with plastic adaptor or in plastic material. The cylinder can be fixed with the wide range of stainless steel accessories.

Construction characteristics

End caps, barrel, piston rod	Stainless steel AISI 316
Piston	Aluminium
Seals	NBR (PUR piston rod seals) FPM PUR
Fixing / Accessories	AISI 316 / 304

Operational characteristics

Fluid	Filtered air. No lubrication needed, if applied it shall be continuous.
Max. pressure	10 bar
Bore Cushioning lenght	Ø 16 - 20 - 25 - 32 - 40 - 50 - 63 mm 15 - 18 - 18 - 18 - 22 - 22 - 25

Operating temperature

Seals material	Operating temperature	Piston		Cushioning		Bores
		Magnetic	Non magnetic	Pneumatic adjustable	Pneumatic fix	
NBR	-5°C - +70°C	●	●	●	●	Ø16-Ø20-Ø25-Ø32-Ø40-Ø50-Ø63
FPM	-5°C - +80°C	●		●	●	Ø16-Ø20-Ø25-Ø32-Ø40-Ø50-Ø63
	-5°C - +150°C		●	●	●	Ø16-Ø20-Ø25-Ø32-Ø40-Ø50-Ø63
PUR	-5°C - +70°C	●	●	●		Ø16-Ø20-Ø25-Ø32
	-30°C - +80°C	●	●		●	Ø16-Ø20-Ø25-Ø32
		●	●	●	●	Ø40-Ø50-Ø63

Please follow the suggestions below to ensure a long life for these cylinders:
- use clean and lubricated air
- correct alignment during assembly with regard to the applied load so as to avoid radial components or bending the rod.
- avoid high speeds together with long strokes and heavy loads: this would produce kinetic energy which the cylinder cannot absorb, especially if used as a limit stop (in this case use mechanical stop device)
- evaluate the environmental characteristics of cylinder used (high temperature, hard atmosphere, dust, humidity etc.)

Please note: air must be dried for applications with lower temperature.
Our Technical Department will be glad to help.

Standard strokes

Ø16 :

15 - 25 - 50 - 75 - 80 - 100 - 150 - 160 - 200 - 250 - 300 mm

Ø20 - Ø25 :

15 - 25 - 50 - 75 - 80 - 100 - 150 - 160 - 200 - 250 - 300 - 320 - 350 - 400 mm

Ø32 - Ø63 :

15 - 25 - 50 - 75 - 80 - 100 - 150 - 160 - 200 - 250 - 300 - 320 - 350 - 400 - 450 - 500 mm

Coding key

12X _ _ . _ _ _ . _ _ _ _ . _ . _

FUNCTION	
A	Double acting 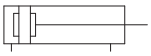
B	Double acting cushioned 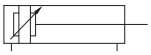
C	Double acting through rod 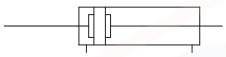
D	Double acting cushioned through rod 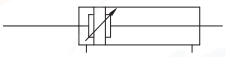

BORE
016
020
025
032
040
050
063

STROKE

MAGNETIC PISTON VARIANTS	
M	Magnetic piston max. temperature +80°C
N	Non magnetic piston

SEALS	
N	NBR
V	FPM
P	PUR

	TYPE		
	FRONT END CAP	BASIC VERSION	REAR END CAP
A	CLEAN PROFILE	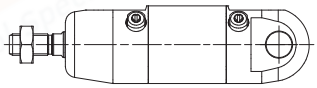	WITH INTEGRATED TRUNNION
B	CLEAN PROFILE	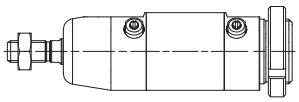	THREADED
C	THREADED	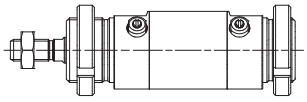	THREADED
D	THREADED	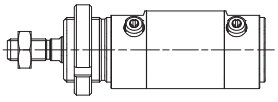	SHORT END CAP
E*	FOR PIN	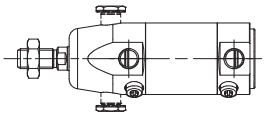	SHORT END CAP

* Available only for Ø32 - Ø40 - Ø50 - Ø63

	END CAP	THROUGH ROD CYLINDER VERSION	END CAP
S	THREADED	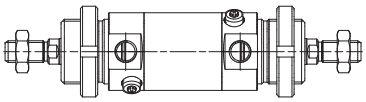	THREADED
T	THREADED	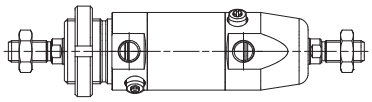	CLEAN PROFILE

Cylinder type "A"

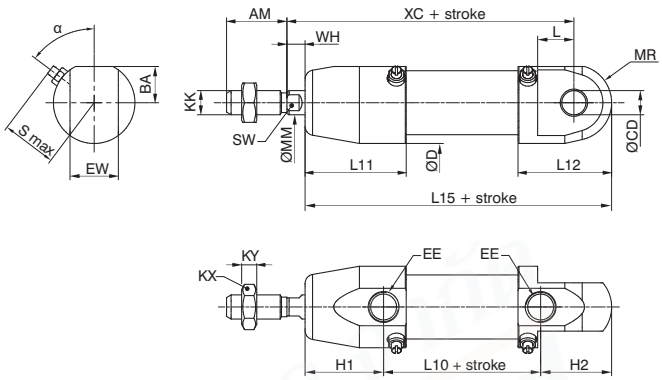

from Ø16 to Ø25

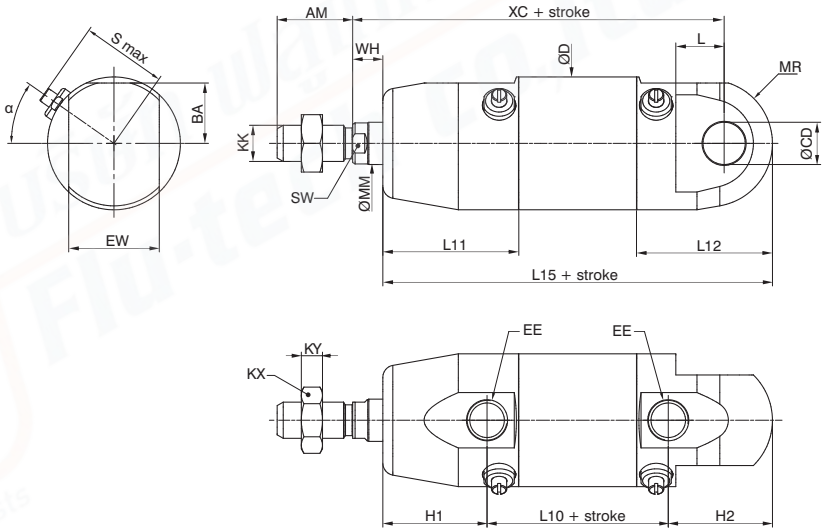

from Ø32 to Ø63

Cylinder type "B"

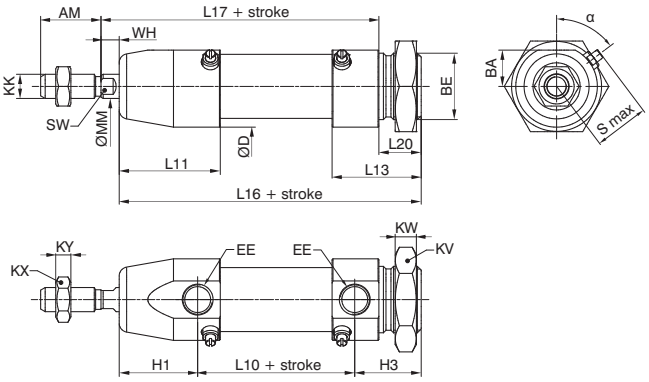

from Ø16 to Ø25

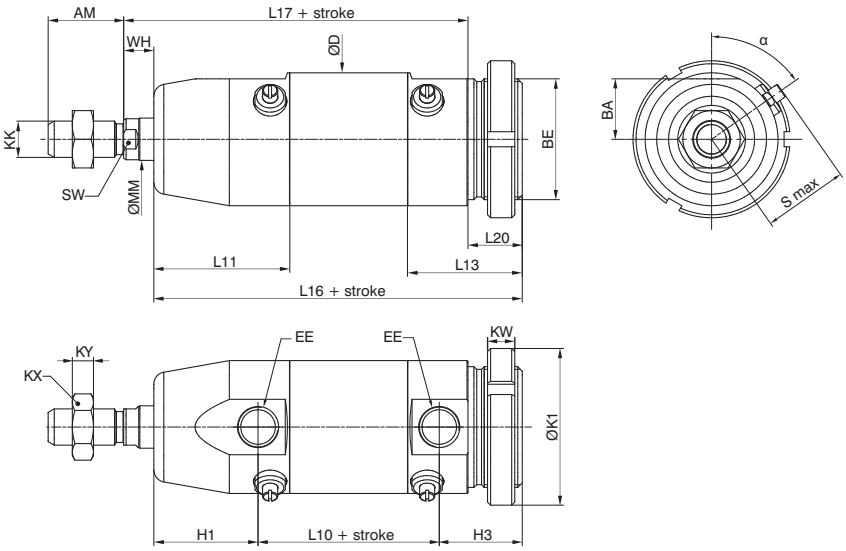

from Ø32 to Ø63

Cylinder type "C"

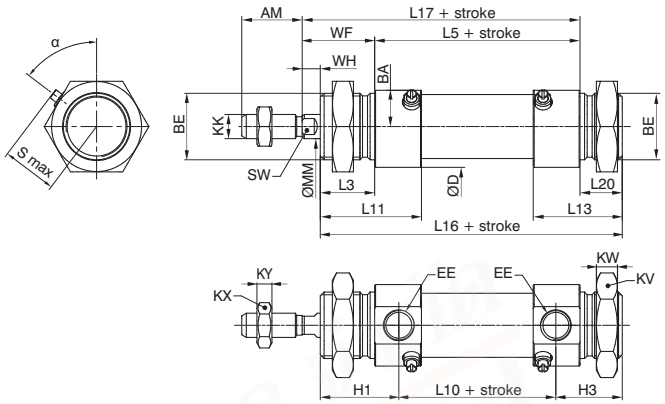

from Ø16 to Ø25

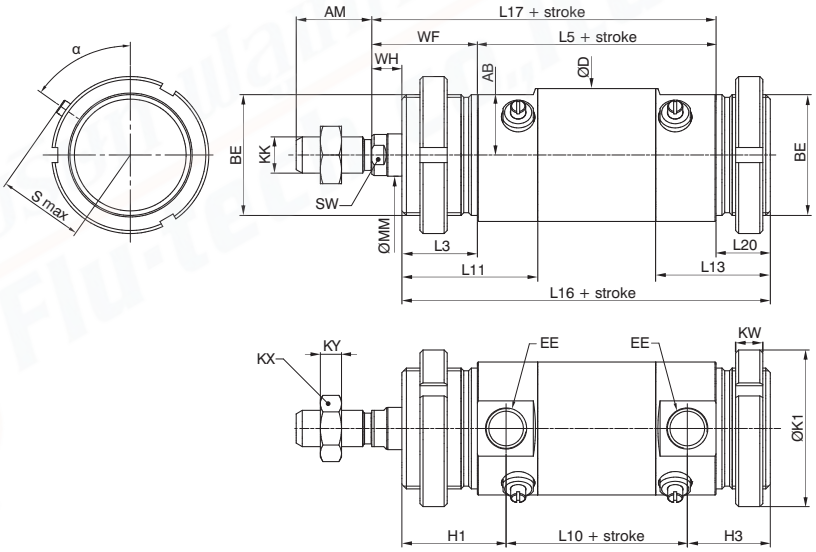

from Ø32 to Ø63

Cylinder type "D"

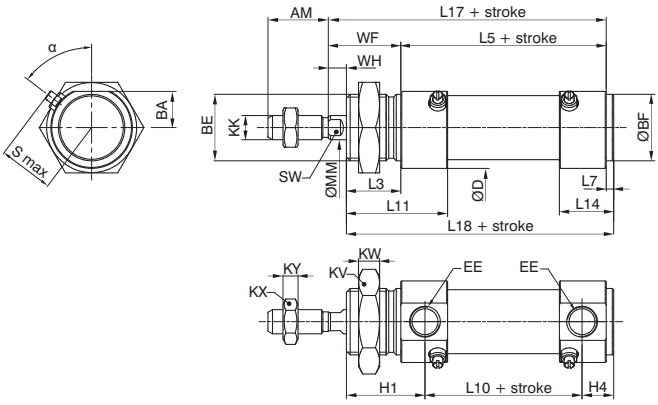

from Ø16 to Ø25

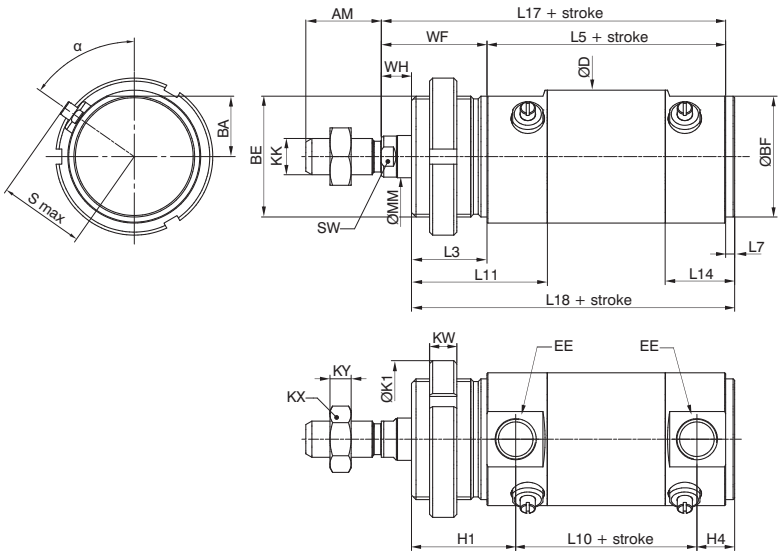

from Ø32 to Ø63

Cylinder type "E"

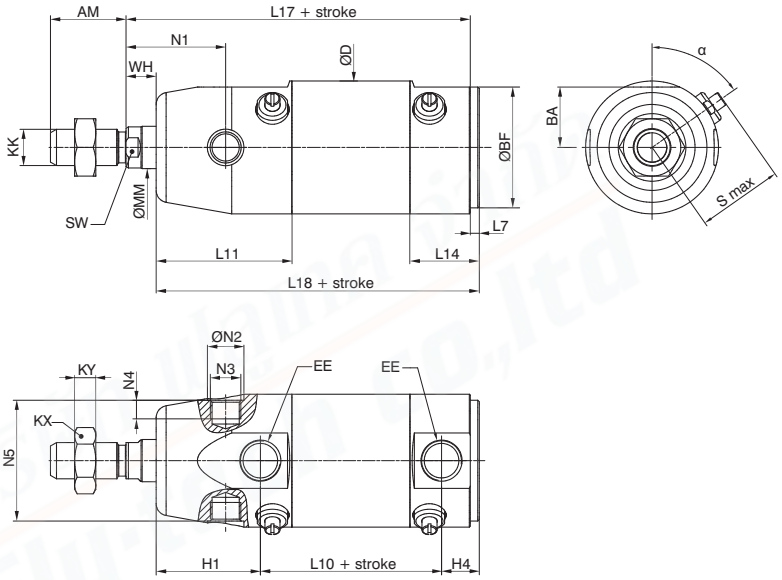

from Ø32 to Ø63

Cylinder type "S"

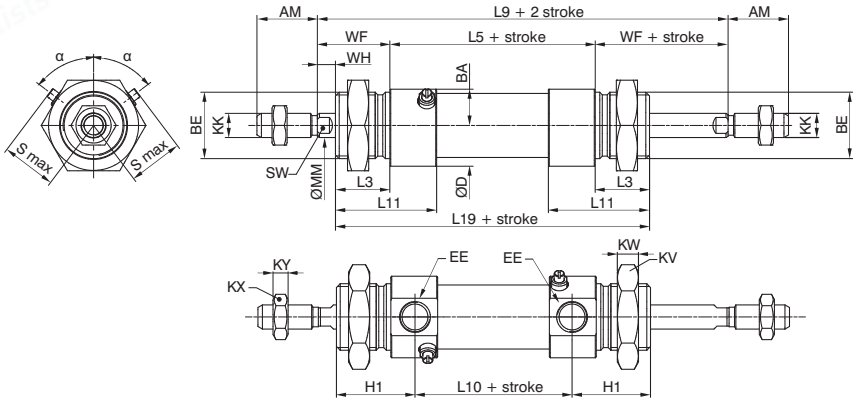

from Ø16 to Ø25

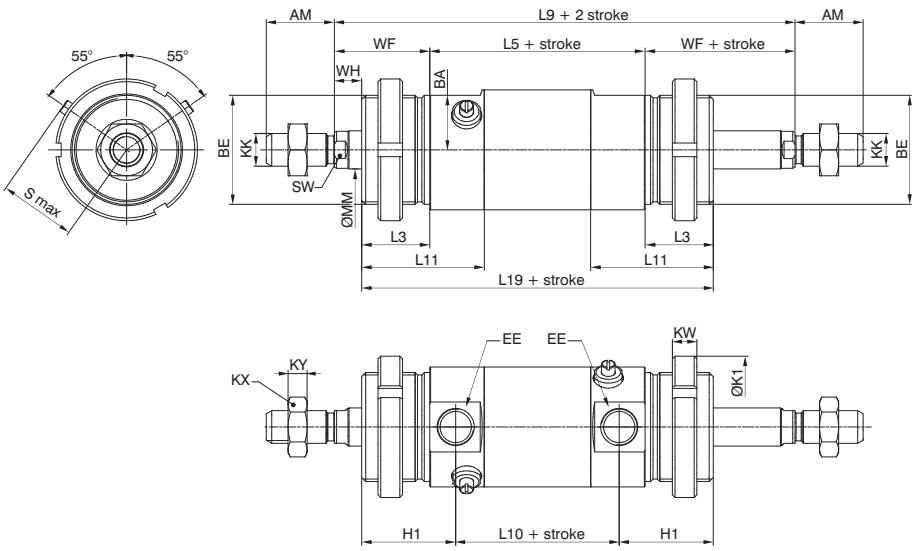

from Ø32 to Ø63

WWW.FLUTECH.CO.TH SALES@FLUTECH.CO.TH + 66 (0) 2384-6060 + 66 (0) 2384-5701

Cylinder type "T"

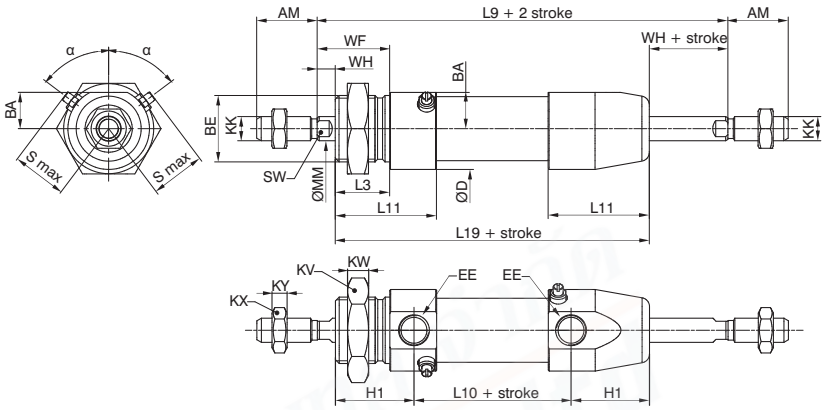

from Ø16 to Ø25

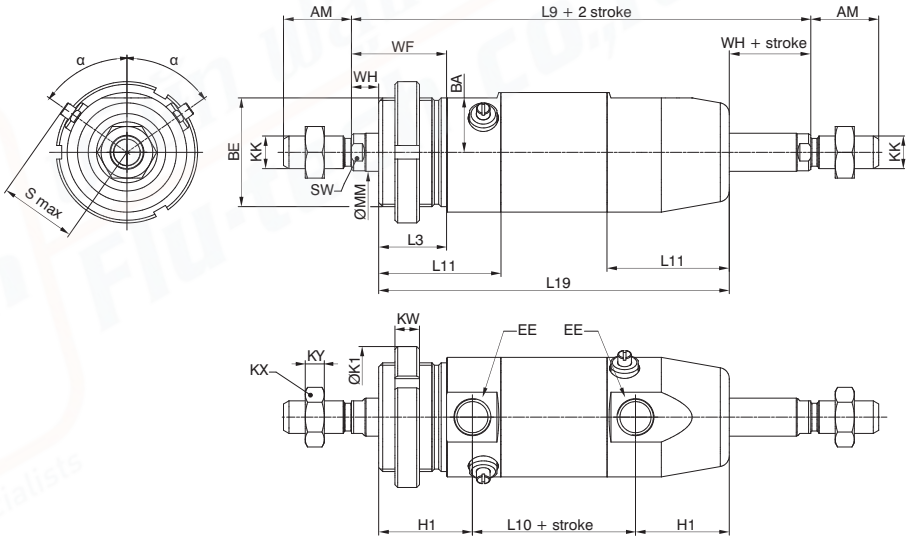

from Ø32 to Ø63

Weight charts

	BASIC VERSION		WEIGHT (g)						
			Ø16	Ø20	Ø25	Ø32	Ø40	Ø50	Ø63
A	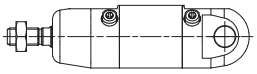	Stroke 0	131	264	371	621	1060	1600	3150
		every each 10mm	5	7	11	26	33	42	65
B	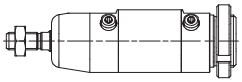	Stroke 0	150	310	410	666	1160	1700	3230
		every each 10mm	5	7	11	26	33	42	65
C	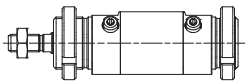	Stroke 0	153	323	411	688	1200	1660	3060
		every each 10mm	5	7	11	26	33	42	65
D	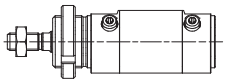	Stroke 0	129	267	359	580	1020	1460	2800
		every each 10mm	5	7	11	26	33	42	65
E*	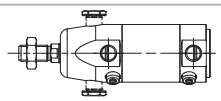	Stroke 0	/	/	/	558	960	1480	2930
		every each 10mm	/	/	/	26	33	42	65

* Available only for Ø32 - Ø40 - Ø50 - Ø63

	THROUGH ROD CYLINDER VERSION		Ø16	Ø20	Ø25	Ø32	Ø40	Ø50	Ø63
S	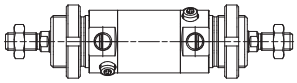	Stroke 0	172	350	465	745	1364	1793	3318
		every each 10mm	7	11	18	35	48	58	90
T	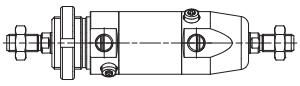	Stroke 0	181	336	470	723	1299	1832	3483
		every each 10mm	7	11	18	35	48	58	90

Table of dimensions

Bore	Ø16	Ø20	Ø25	Ø32	Ø40	Ø50	Ø63
α	53°	53°	53°	55°	55°	55°	55°
AM	16	20	22	20	25	25	32
BA	9	12	13,5	16	20	25	31
BE	M16x1,5	M22x1,5	M22x1,5	M30x1,5	M40x1,5	M40x1,5	M45x1,5
ØBF	16	22	22	30	40	40	45
EE	M5	G1/8	G1/8	G1/8	G1/4	G1/4	G3/8
EW	12	16	16	26	30	30	40
ØCD ^{H9}	6	8	8	12	14	14	16
ØD	21	27	30	36	44	54	68
H1	22,5	26	30	30	34,5	34,5	40
H2	17,5	23,5	27,5	30	34,5	34,5	40
H3	16,5	22	22	23	27,5	27,5	30
H4	7,5	10,5	10,5	10,5	12,5	12,5	16
ØK1	/	/	/	/	52	52	60
KK	M6x1	M8x1,25	M10x1,25	M10x1,25	M12x1,75	M12x1,75	M16x1,5
KX	10	13	17	17	19	19	24
KY	4	5	6	6	7	7	8
KV	22	30	30	42	/	/	/
KW	6	7	7	8	9	9	10
L	9	12	14	13	16	16	22
L3	17	18	22	22	25	25	28
L5	56	68	69	69	79	82	106
L7	2	2,5	2,5	2,5	3	3	4
L9	100	116	125	125	149	152	180
L10	45	52	53	53	60	63	82
L11	28	33,5	37	38,5	45	45	54
L12	23	31	34,5	38,5	45	45	54
L13	22	29,5	29	31,5	38	38	44
L14	12,8	18	17,5	19	23	23	30
L15	85	101,5	110,5	113	129	132	162
L16	84	100	105	106	122	125	152
L17	78	92	97	97	114	117	143
L18	75	88,5	93,5	93,5	107	110	138
L19	90	104	113	113	129	132	162
L20	11	14	14	15	18	18	18
ØMM	6	8	10	12	14	16	20
MR	8	12,5	12,5	17	21	26	34,5
N1	/	/	/	27	33	40	45
ØN2$^{+0/-0,05}$	/	/	/	10,1	12,1	14,1	16,1
N3	/	/	/	M8x0,75	M10x1	M12x1	M14x1
N4	/	/	/	5,5	6	8,7	11,7
N5$^{+0,1/-0}$	/	/	/	32	40	50	64
Smax	15,5	18,5	19,5	25	28,5	33,5	40
SW	5	6	8	10	12	12	17
WF	22	24	28	28	35	35	37
WH	5	6	6	6	10	10	9
XC	82	95	104	105	123	126	154

Accessories and fixing devices

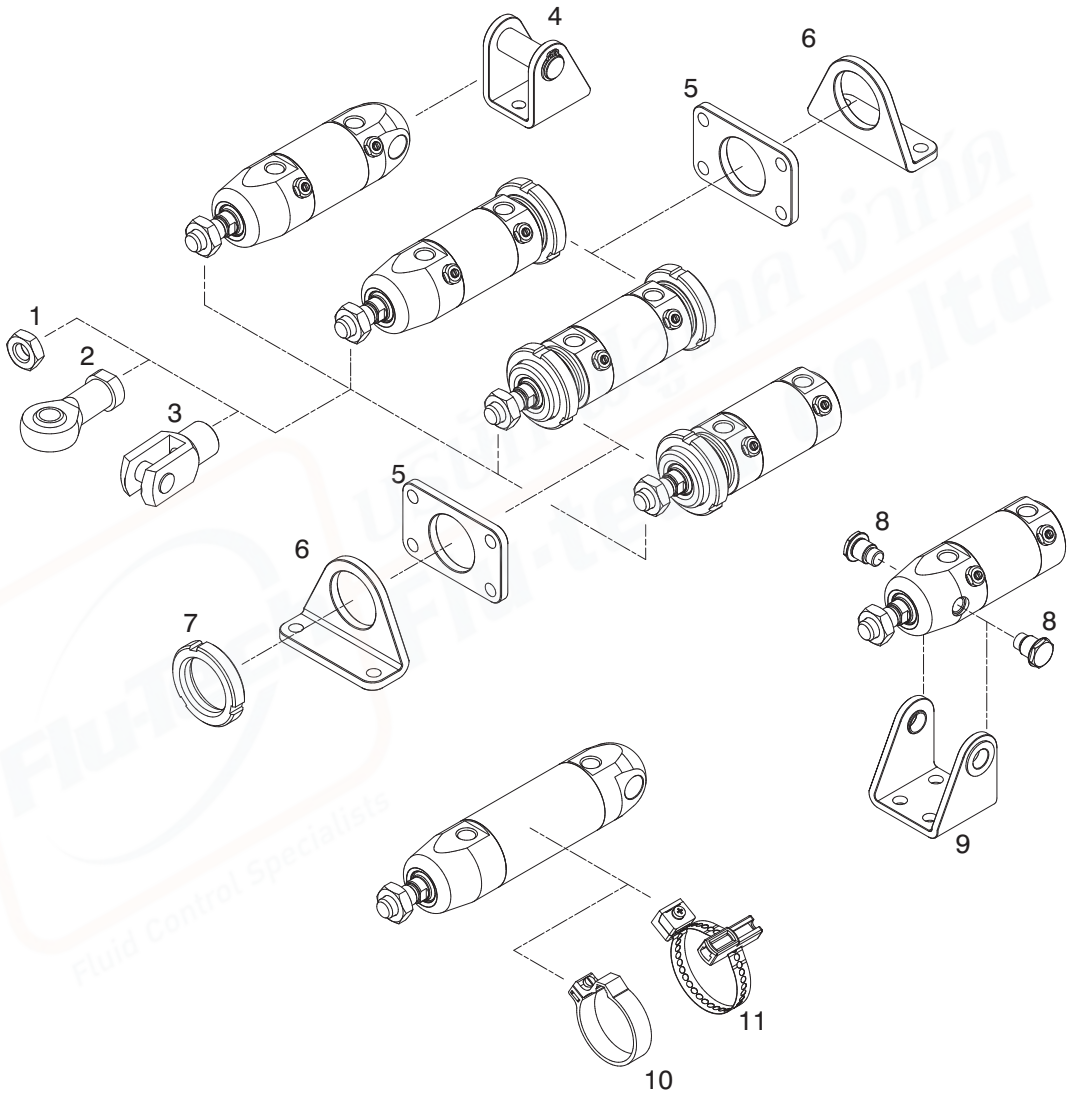

Position	Description	Ordering code	Materials
1	Rod lock nut	12X.Ø.11	Stainless steel AISI 316
2	Ball joint	12X.Ø.10	Stainless steel
3	Fork	12X.Ø.04	Stainless steel
4	Rear clevis	12X.Ø.03	Stainless steel
5	Flange	12X.Ø.02	Stainless steel AISI 316
6	Foot	12X.Ø.01	Stainless steel AISI 316
7	Nut or lock nut for the endcaps	12X.Ø.05	Stainless steel AISI 316
8	Pin for front clevis (Ø32 - Ø63)	12X.Ø.09	Stainless steel AISI 316
9	Front clevis (Ø32 - Ø63)	12X.Ø.08	Stainless steel AISI 316
10	Sensor clamp (Ø16 - Ø50)	12X.Ø.FS	Technopolymer
11	Sensor clamp (Ø16 - Ø63)	12X.Ø.FSX	Stainless steel Technopolymer

Sensor clamps cod. 1580._, MRS._, MHS._

Ordering code
12X.Ø.FS

The kit comprises:
n° 1 clamp (Technopolymer)
n° 1 screw (AISI 304)
n° 1 nut (AISI 304)

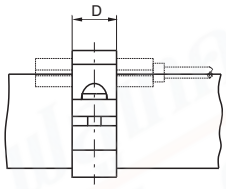

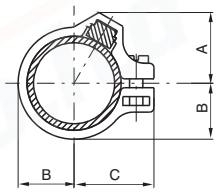

Table of dimensions

Bore	Ø16	Ø20	Ø25	Ø32	Ø40	Ø50
A	14,5	16	17,5	20,5	22	29
B	10,5	12,5	15,3	20	24	29
C	16	18	20,5	26	30	35
D	10	10	10	10	10	10
Weight (g)	3	5	7	8	10	11

Sensor clamps cod. 1580._, MRS._, MHS._

Ordering code
12X.Ø.FSX

The kit comprises:
n° 1 clamp (AISI 304)
n° 1 switch bracket + support (Technopolymer)
n° 1 screw (AISI 304)
n° 1 nut (AISI 304)

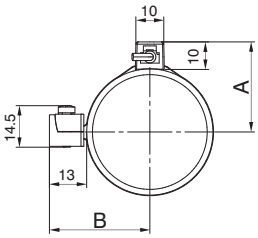

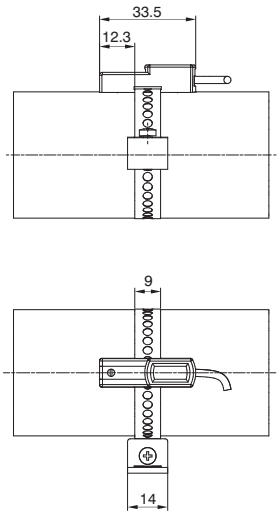

Table of dimensions

Bore	Ø16	Ø20	Ø25	Ø32	Ø40	Ø50	Ø63
A	19	21	23	28	32	37	44
B	22	24	26	31	35	40	47

Foot

Ordering code
12X.Ø.01

The kit comprises:
n° 1 foot (AISI 316)

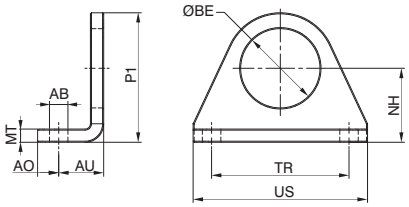

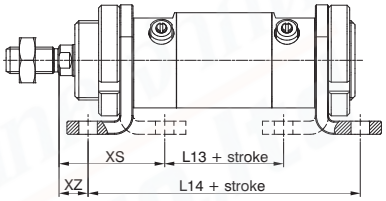

Used to mount the cylinder on the mounting plane with the rod parallel to said plane. Use one for short strokes and two for long strokes.
It is made stamped stainless steel AISI 316.

Bore	16	20	25	32	40	50	63
AB (H13)	5,5	6,5	6,5	6,5	9	9	9
AO	6	8	8	8	10	10	10
AU	14	17	17	17	20	20	20
ØBE	16	22	22	30	40	40	45
L13 (±1)	36	44	44	45	49	52	78
L14 (±1)	84	102	102	103	119	122	146
MT	4	5	5	5	5	5	6
NH (±0.3)	20	25	25	28	40	40	50
P1	33	45	45	50	66,5	66,5	80
TR (Js14)	32	40	40	52	70	70	70
US	42	54	54	66	90	90	90
XS (±1.4)	32	36	40	40	50	50	51
XZ (±1.4)	8	7	11	11	15	15	17
Weight g.	45	90	90	110	210	210	262

Flange

Ordering code
12X.Ø.02

The kit comprises:
n° 1 flange (AISI 316)

(For Ø16 - Ø20 - Ø25)

(For Ø32 - Ø40 - Ø50 - Ø63)

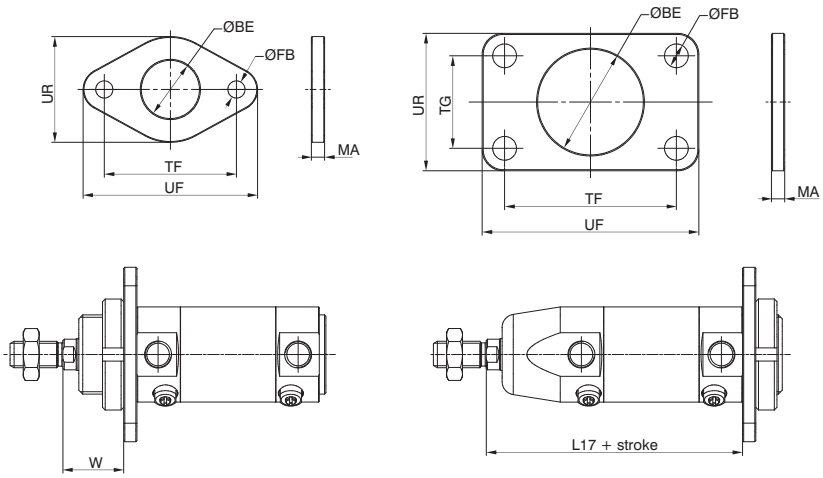

Use to mount the microcylinder at a right angle to the mounting plane.
Made of stainless steel AISI 316.

Bore	16	20	25	32	40	50	63
ØBE	16	22	22	30	40	40	45
ØFB (H13)	5,5	6,5	6,5	6,5	9	9	9
UF	53	66	66	68	82	82	96
UR	30	40	40	50	52	52	70
MA	4	5	5	5	5	5	6
TF (JS14)	40	50	50	52	65	65	76
TG	/	/	/	/	35	35	50
W (±1.4)	18	19	23	23	30	30	31
L17	78	92	97	97	114	117	143
Weight g.	40	85	85	100	105	105	225

Rear clevis

Ordering code
12X.Ø.03

The kit comprises:
n° 1 clevis (AISI 316)
n° 1 pin (AISI 316)
n° 2 circlips (AISI 420)

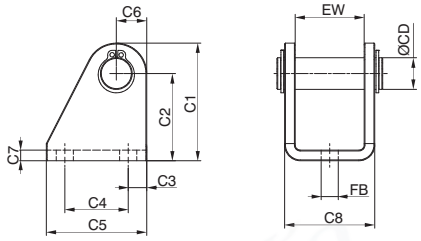

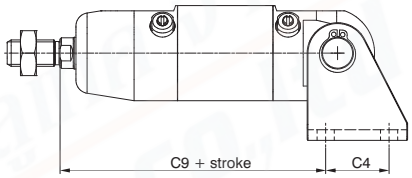

Used to mount by using the rear end cover to mount either parallel or at a right angle to the mounting plane. Allows the cylinder to oscillate and self-align with the linked element to the rod. Necessary to use when the rod may be subject to lateral forces during travel.
Made of stamped stainless steel.

Bore	16	20	25	32	40	50	63
ØCD	6	8	8	12	14	14	16
C1	33,5	39,5	39,5	44,5	53,5	53,5	64
C2 (±0.3)	27	30	30	33	40	40	50
C3	5	6	6	7	10	10	8
C4	15	20	20	24	28	28	34
C5	25	32	32	38	45	45	50
C6	6,5	9,5	9,5	11,5	13,5	13,5	14
C7	3	4	4	4	4	4	6
C8	18	24	24	34	38	38	52
C9 (±0.4)	80,5	91,5	100,5	100,5	119,5	122,5	148
EW	12,1	16,1	16,1	26,1	30,5	30,5	40,5
FB (H13)	5,5	6,5	6,5	6,5	8,5	8,5	9
Weight (g)	35	75	75	135	138	138	284

Rod lock nut / Nut or lock nut for the end cap

Ordering code
Rod lock nut **12X.Ø.11**
Nut / Lock nut for the end cap **12X.Ø.05**

The kit comprises:
n° 1 rod lock nut (AISI 316)

The kit comprises:
n° 1 nut / lock nut
for the end cap (AISI 316)

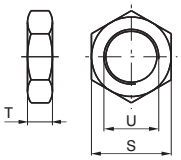

Rod lock nut:
Mounted on the rod thread.
Made of stainless steel AISI 316.
Nut / Lock nut for the end cap:
Used to fasten flanges or feet to the endcaps of the microcylinder. The nuts are mounted on diameters that go from Ø16 to Ø25 mm, the lock nuts from Ø32 to Ø63 mm. Both are supplied with the microbore cylinders.

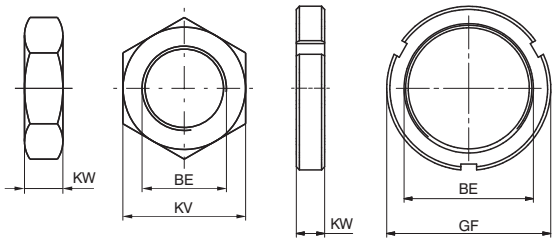

Bore	S	T	U	Dado stelo Weight (g)	BE	KV	GF	KW	Nut / Lock nut for the end caps weight (g)
16	10	4	M6X1	3	M16X1,5	22	-	6	16
20	13	5	M8X1,25	4	M22X1,5	30	-	7	25
25	17	6	M10X1,25	9	M22X1,5	30	-	7	25
32	17	6	M10X1,25	9	M30X1,5	-	42	8	42
40	19	7	M12X1,75	12	M40X1,5	-	52	9	62
50	19	7	M12X1,75	12	M40X1,5	-	52	9	62
63	24	8	M16X1,5	21	M45X1,5	-	60	10	100

Front clevis

Ordering code
12X.Ø.08

The kit comprises:
n° 1 clevis (AISI 316)
n° 2 bushings (Technopolymer)

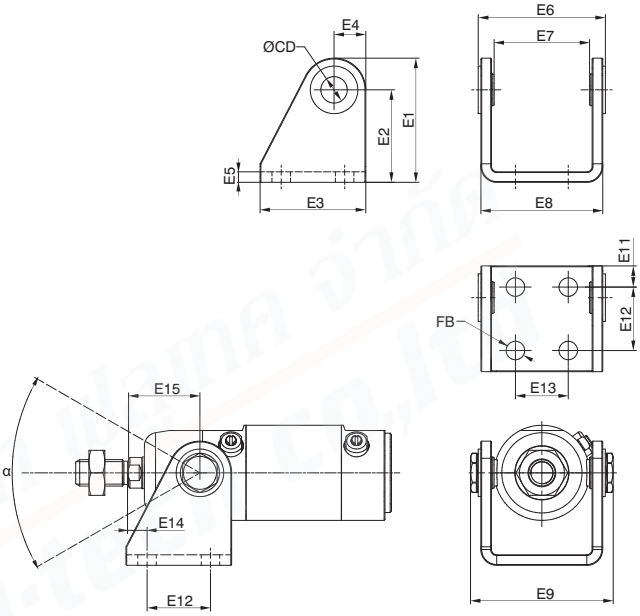

Used to mount by using the front end cap to mount parallel to the mounting plane. Allows the cylinder to oscillate and self-align with the linked element to the rod. Necessary to use when the rod may be subject to lateral forces during travel. Made of stamped stainless steel AISI 316.

Bore	E1	E2 (±0,2)	E3	E4	E5	E6	E7	E8	E9	E11	E12	E13	E14	E15	FB (H13)	ØCD	α	Weight (g)
32	47	35	40	12	4	48	36	46	54	8	24	20	7	27	7	10	50°	121
40	53	40	50	13	4	60	49	58	68	10	30	28	6	33	9	12	50°	175
50	59	45	54	14	6	74	54	72	84	10	34	36	10	40	9	14	50°	330
63	65	50	65	16	6	88	72	86	98	15	35	42	11	45	9	16	40°	458

Pin for front clevis

Ordering code
12X.Ø.09

The kit comprises:
n° 1 pin (AISI 316)

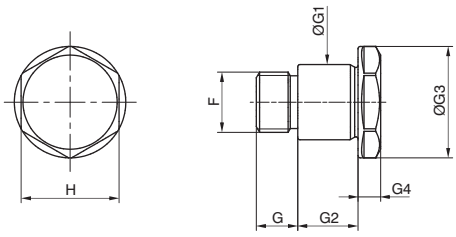

Bore	32	40	50	63
G	5,5	6	8,5	11
G1 (h7)	10	12	14	16
G2	8	10	12	12
G3	15	17	19	24
G4	3	4	5	5
F	M8X0,75	M10X1	M12X1	M14X1
H	13	15	17	21

Ball joint

Ordering code
12X.Ø.10

The kit comprises:
n° 1 ball joint (AISI 304 and 420)

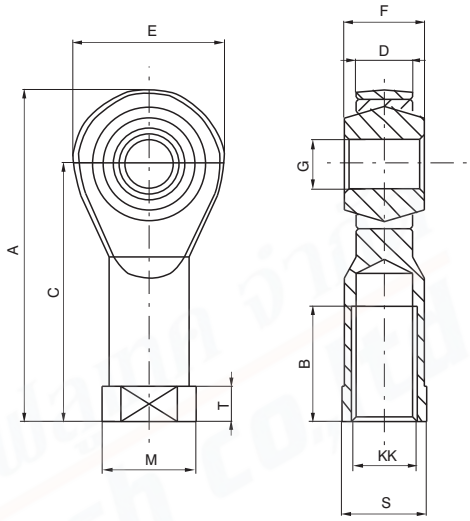

Mounted on the rod thread, assures a regular operation even in the presence of significant forces to the linked element.
Made of stainless steel AISI 304 and 420.

Bore	16	20	25	32	40	50	63
A	40	48	57	57	66	66	85
B	12	16	20	20	22	22	28
C	30	36	43	43	50	50	64
D	6,75	9	10,5	10,5	12	12	15
E	20	24	28	28	32	32	42
F	9	12	14	14	16	16	21
G (H 7)	6	8	10	10	12	12	16
KK	M6	M8	M10X1,25	M10X1,25	M12X1,75	M12X1,75	M16X1,5
M	13	16	19	19	22	22	27
S	11	14	17	17	19	19	22
T	5	5	6,5	6,5	6,5	6,5	8
Weight (g)	25	25	75	75	112	112	222

Cylinder rod fork

Ordering code
12X.Ø.04

The kit comprises:
n° 1 fork (AISI 303)
n° 1 pin (AISI 303)
n° 2 circlips (AISI 420)

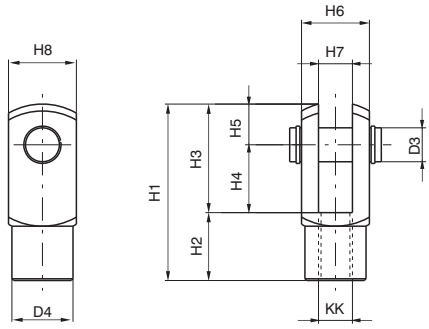

Mounted on the rod thread, assures a regular operation even in the presence of significant forces to the linked element. Made of stainless steel.

Bore	D3	D4	H1	H2	H3	H4	H5	H6	H7 (B12)	H8	KK	Weight (g)
16	6	10	31	12	19	12	7	12	6	12	M6X1	20
20	8	14	42	16	26	16	10	16	8	16	M8X1.25	45
25	10	18	52	20	32	20	12	20	10	20	M10X1.25	90
32	10	18	52	20	32	20	12	20	10	20	M10X1.25	90
40	12	20	62	18	38	24	14	24	12	24	M12X1.75	121
50	12	20	62	18	38	24	14	24	12	24	M12X1.75	121
63	16	26	83	32	51	32	19	32	16	32	M16X1.5	340

Sensor clamps for microbore cylinders with threaded end covers and Technopolymer

Sensor clamps - codes 1500._, RS._, HS._	Sensor clamps - codes 1580._, MRS._, MHS._
Ordering code	Ordering code
1260.Ø.F	**1260.Ø.FS**

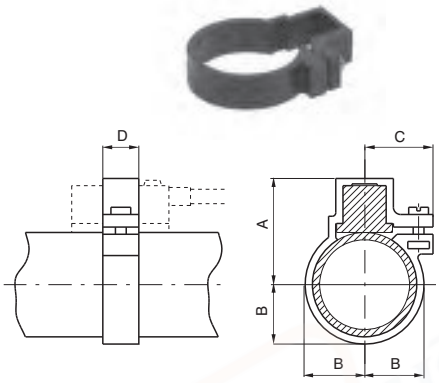

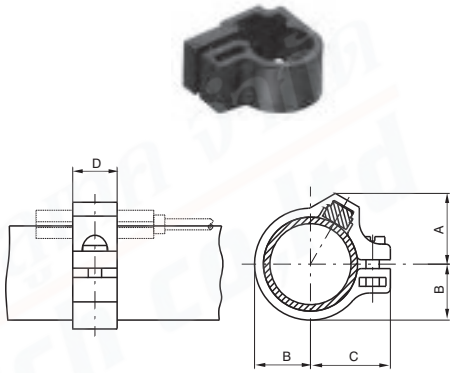

Table of dimensions

Bore	Ø10	Ø12	Ø16	Ø20	Ø25	Ø32	Ø40	Ø50
A	23	23	25	27	29,5	33	37	42
B	10	10	12	14	16,5	20	24	29
C	15	15	16,5	17,5	19	20	22	24
D	10	10	10	10	10	10	10	10
Weight (gr)	2	2	3	5	7	10	14	16

Table of dimensions

Bore	Ø10	Ø12	Ø16	Ø20	Ø25	Ø32	Ø40	Ø50
A	13	14	15,4	17,2	19,3	20,5	22	29
B	9	10	12	14	16,5	20	24	29
C	16	16	18	19,5	22	26	30	35
D	10	10	10	10	10	10	10	10
Weight (gr)	2	2	3	5	7	8	10	11

Sensor clamps for microbore cylinders with rolled end covers "MIR" and "MIR-INOX"

Sensor clamps - codes 1500._, RS._, HS._	Sensor clamps - codes 1580._, MRS._, MHS._
Ordering code	Ordering code
1280.Ø.F - cylinders MIR **1280.Ø.FX - cylinders MIR-INOX**	**1280.Ø.FS - cylinders MIR** **1280.Ø.FSX - cylinders MIR-INOX**

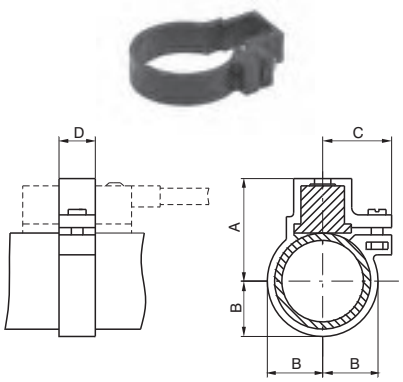

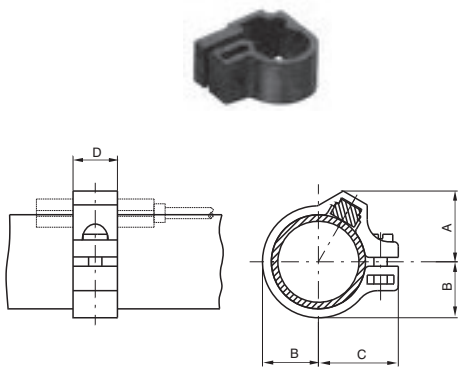

Table of dimensions

Bore	Ø16	Ø20	Ø25	Ø32
A	24	25,5	28,5	31,8
B	10,5	12,5	15,5	18,8
C	16,5	17,5	19	20
D	10	10	10	10
Weight (gr)	3	5	7	10

Table of dimensions

Bore	Ø8	Ø10	Ø12	Ø16	Ø20	Ø25	Ø32
A	11	12	13	14,5	16	17,5	19,5
B	6,5	7,5	8,5	10,5	12,5	15,3	18,8
C	12,5	13,5	15	16	18	20,5	24
D	10	10	10	10	10	10	10
Weight (gr)	2	2	2	3	5	7	10

Sensor for microbore cylinders

For technical characteristics and ordering codes see the magnetic sensors sections

Foot

Ordering code
1200.Ø.01 (1 piece)

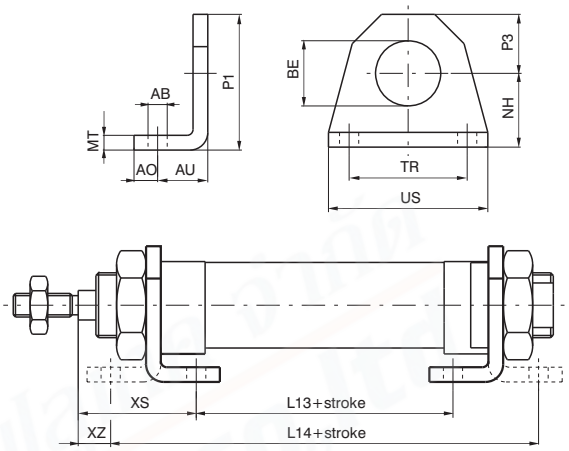

Used to mount the cylinder on the mounting plane with the rod parallel to said plane. Use one for short strokes and two for long strokes. It is made of stamped steel, made corrosion resistant by cataphoreses treatment. Attached to the end caps by means of nuts (or lock nuts) 05.

Attention: the dimensions of microbore cylinders with threaded end covers (*) increase of 10 mm. for microbore cylinders equipped with magnetic piston and spring return, and of 9 mm. for microbore cylinders with 10 mm. BORE magnetic piston.

Bore	8	10	12	16	20	25	32	40	50
AB (H13)	4,5	4,5	5,5	5,5	6,5	6,5	6,5	8,5	8,5
AO	5	5	6	6	8	8	8	10	10
AU	11	11	14	14	17	17	17	20	20
BE	12	12	16	16	22	22	30	40	40
L13 (±1) *	30	30	30	36	44	45	45	49	52
L14 (±1) *	68	68	78	84	102	103	103	119	122
MT	3	3	4	4	5	5	5	5	5
NH (±0,3)	16	16	20	20	25	25	28	40	40
P1	26	26	33	33	45	45	50	70	70
P3	10	10	13	13	20	20	22	30	30
TR (JS14)	25	25	32	32	40	40	52	70	70
US	35	35	42	42	54	54	66	90	90
XS (±1,4)	24	24	32	32	36	40	40	50	50
XZ (±1,4)	5	5	8	8	7	11	11	15	15
Weight g.	22	22	45	45	90	90	110	210	210

Flange

Ordering code
1200.Ø.02 (1 piece)

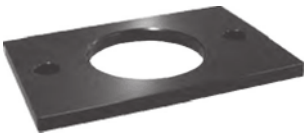

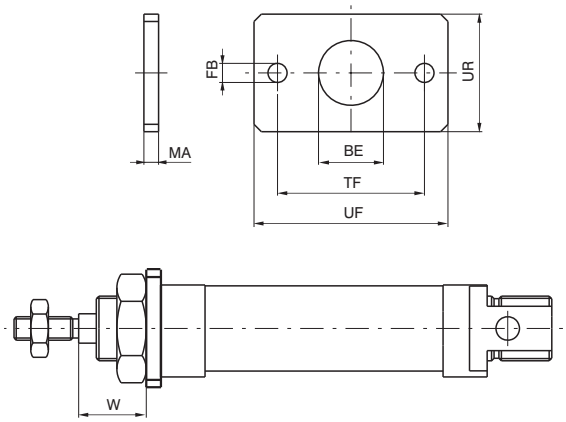

Used to mount the microcylinder at a right angle to the mounting plane. Attached to the front (or rear) end cap by a nut (or lock nut) 05. Made of extruded steel, made corrosion resistant by cataphoresis.

Bore	8	10	12	16	20	25	32	40	50
BE	12	12	16	16	22	22	30	40	40
FB (H13)	4,5	4,5	5,5	5,5	6,5	6,5	6,5	8,5	8,5
UF	40	40	53	53	66	66	68	90	90
UR	25	25	30	30	40	40	50	60	60
MA	3	3	4	4	5	5	5	5	5
TF (JS14)	30	30	40	40	50	50	52	70	70
W (±1,4)	13	13	18	18	19	23	23	30	30
Weight g.	20	20	40	40	85	85	100	150	150

Rear eye

Ordering code
1200.Ø.03 (1 piece)

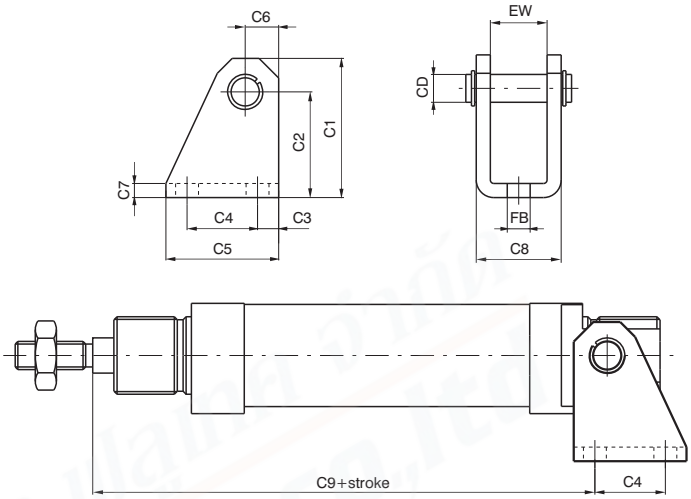

Use with the rear end cover to mount the cylinder either parallel or at a right-angle to the mounting plane. This allows the cylinder to oscillate and self-align with the linked element to the rod. This is necessary when the rod may be subject to lateral during travel.

Attention: the dimensions of microbore cylinders with threaded end covers (*) increase by 10mm for equipped with magnetic piston and spring return, and by 9mm for microbore cylinders with 10mm BORE magnetic piston.

Bore	8	10	12	16	20	25	32	40	50
CD	4	4	6	6	8	8	12	14	14
C1	28,5	28,5	33,5	33,5	39,5	39,5	44,5	53,5	53,5
C2 (±0,3)	24	24	27	27	30	30	33	40	40
C3	3,5	3,5	5	5	6	6	7	10	10
C4	12,5	12,5	15	15	20	20	24	28	28
C5	20	20	25	25	32	32	38	45	45
C6	4,5	4,5	6,5	6,5	9,5	9,5	11,5	13,5	13,5
C7	2,5	2,5	3	3	4	4	4	4	4
C8	13	13	18	18	24	24	34	38	38
C9 (±0,4) *	63	63	73,5	80,5	91,5	100,5	100,5	119,5	122,5
EW	8,1	8,1	12,1	12,1	16,1	16,1	26,1	30,1	30,1
FB (H13)	4,5	4,5	5,5	5,5	6,5	6,5	6,5	8,5	8,5
Weight g.	20	20	35	35	75	75	135	180	180

Cylinder rod forks

Ordering code
1200.Ø.04 * (with pin) **1200.Ø.04/1** (with pin) *Available from bore Ø12

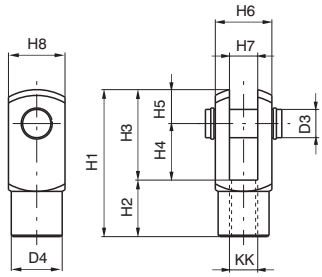

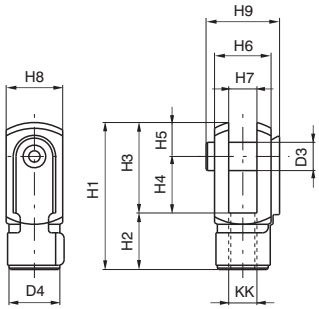

Forks:
Similar to hinge 03, mounted on the rod thread, assures a regular operation even in the presence of significant forces to the linked element. Made of zinc plated steel.
Nut:
Used to fasten flanges or feet to the endcaps of the microcylinder. The nuts are mounted on BORE that go from 8 to 25, the lock nuts on 32, 40 and 50. Both are supplied (one piece) with the microbore cylinders.

Nut or lock nut for the endcaps

Ordering code
1200.Ø.05

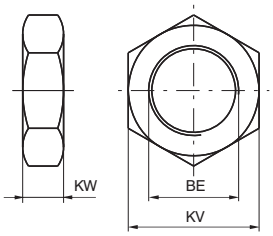

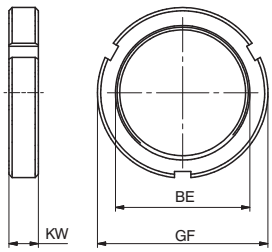

Bore	D3	D4	H1	H2	H3	H4	H5	H6	H7 (B12)	H8	H9	KK	BE	KV	GF	KW	Forks weight g.	Nuts weight g.
8	4	8	21	8	13	8	5	8	4	10	11	M4x0,7	M12x1,25	17	-	5,5	12	7
10	4	8	21	8	13	8	5	8	4	10	11	M4x0,7	M12x1,25	17	-	5,5	12	7
12	6	10	31	12	19	12	7	12	6	12	18	M6x1	M16x1,5	22	-	6	20	16
16	6	10	31	12	19	12	7	12	6	12	18	M6x1	M16x1,5	22	-	6	20	16
20	8	14	42	16	26	16	10	16	8	16	23	M8x1,25	M22x1,5	30	-	7	45	25
25	10	18	52	20	32	20	12	20	10	20	27	M10x1,25	M22x1,5	30	-	7	90	25
32	10	18	52	20	32	20	12	20	10	20	27	M10x1,25	M30x1,5	-	42	8	90	42
40	12	20	62	24	38	24	14	24	12	24	32	M12x1,75	M40x1,5	-	52	9	145	60
50	12	20	62	24	38	24	14	24	12	24	32	M12x1,75	M40x1,5	-	52	9	145	60

Foot

Ordering code
1200.Ø.01X (1 piece)

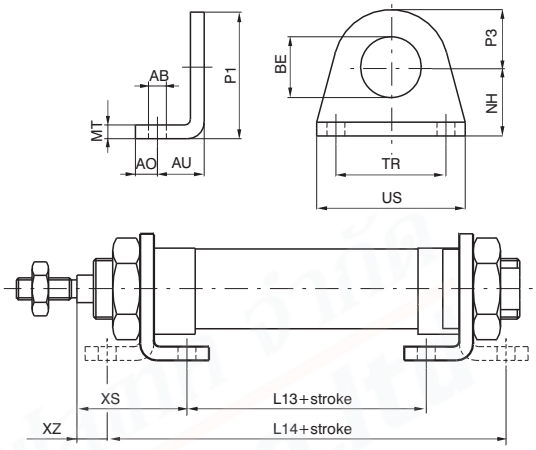

Used to mount the cylinder on the mounting plane with the rod parallel to said plane. Use one for short strokes and two for long strokes.
It is made stamped stainless steel AISI 304. Attached to the end caps by means of nuts (or lock nuts) 05X.

Bore	16	20	25	32
AB (H13)	5,5	6,5	6,5	6,5
AO	6	8	8	8
AU	14	17	17	17
BE	16	22	22	30
L13 (±1)	36	44	44	45
L14 (±1)	84	102	102	103
MT	4	5	5	5
NH (±0,3)	20	25	25	28
P1	33	45	45	50
P3	13	20	20	22
TR (Js14)	32	40	40	52
US	42	54	54	66
XS (±1,4)	32	36	40	40
XZ (±1,4)	8	7	11	11
Weight g	45	90	90	110

Flange

Ordering code
1200.Ø.02X

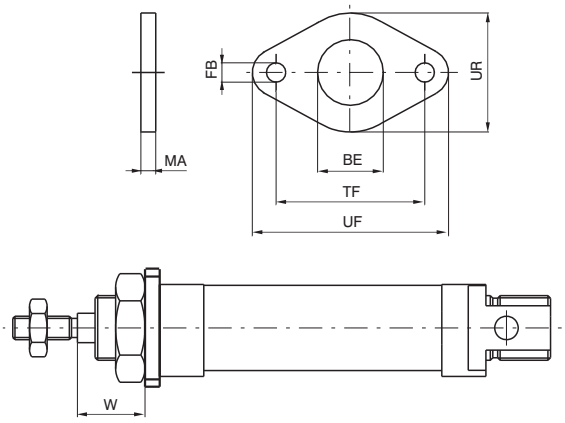

Use to mount the microbore cylinder at a right angle to the mounting plane. Attached to the front (or rear) endcap by a nut (or lock nut)05X. Made of stainless steel AISI 304.

Bore	16	20	25	32
BE	16	22	22	30
FB (H13)	5,5	6,5	6,5	6,5
UF	53	66	66	68
UR	30	40	40	50
MA	4	5	5	5
TF (JS14)	40	50	50	52
W (±1,4)	18	19	23	23
Weight g	40	85	85	100

Rear eye

Ordering code
1200.Ø.03X (1 piece)

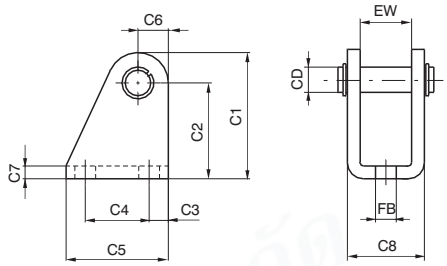

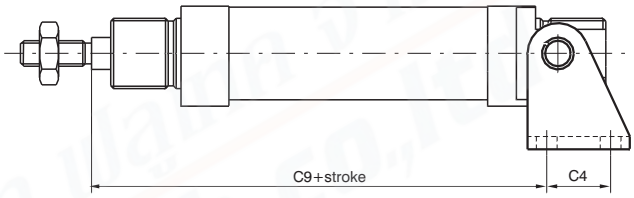

Used to mount by using the rear end cover to mount either parallel or at a right angle to the mounting plane. Allows the cylinder to oscillate and self-align with the linked element to the rod. Necessary to use when the rod may be subject to lateral forces during travel.
Made of stamped stainless steel AISI 304.

Bore	16	20	25	32
CD	6	8	8	12
C1	33,5	39,5	39,5	44,5
C2 (±0,3)	27	30	30	33
C3	5	6	6	7
C4	15	20	20	24
C5	25	32	32	38
C6	6,5	9,5	9,5	11,5
C7	3	4	4	4
C8	18	24	24	34
C9 (±0,4)	80,5	91,5	100,5	100,5
EW	12,1	16,1	16,1	26,1
FB (H13)	5,5	6,5	6,5	6,5
Weight g.	35	75	75	135

Cylinder rod fork / Nut or lock nut for the endcaps

Ordering code
1200.Ø.04X (with pin)
1200.Ø.05X (1 piece)

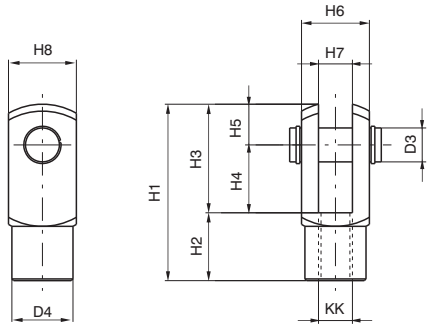

Fork:
Similar to hinge 03X, mounted on the rod thread, assures a regular operation even in the presence of significant forces to the linked element. Made of stainless steel AISI 304.
Nut:
Used to fasten flanges or feet to the endcaps of the microbore cylinder. The nuts are mounted on bores that go from 16 to 25, the lock nuts on 32. Both are supplied (one piece) with the microbore cylinders.

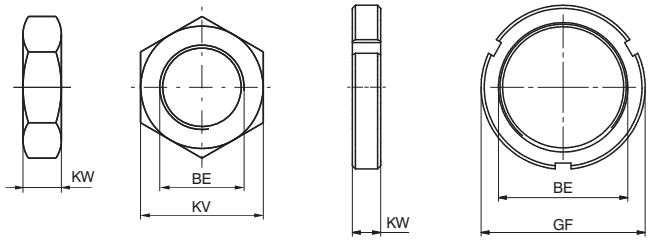

Bore	Weight g fork	Weight g nut	D3	D4	H1	H2	H3	H4	H5	H6	H7 (B12)	H8	KK	BE	KV	GF	KW
16	20	16	6	10	31	12	19	12	7	12	6	12	M6X1	M16X1,5	22	-	6
20	45	25	8	14	42	16	26	16	10	16	8	16	M8X1,25	M22X1,5	30	-	7
25	90	25	10	18	52	20	32	20	12	20	10	20	M10X1,25	M22X1,5	30	-	7
32	90	42	10	18	52	20	32	20	12	20	10	20	M10X1,25	M30X1,5	-	42	8