Series 1500 - Compact cylinders ECOMPACT-S

General

Based on the **ECOMPACT** series with piston rods and centring diameters according to ISO 15552 standard.

Construction characteristics

Body	anodised aluminium
End caps	aluminium alloy casting painted with brass centring bearing
Bearing piston rod	spheroid bronze on steel band with P.T.F.E. coat
Piston rod	C43 chromed steel (on request stainless steel)
Piston	Ø32 and Ø40 acetal resin (aluminium on request) Ø50 and Ø63 aluminium (with FPM seals, aluminium for all of standard diameters)
Seals	standard: NBR oil resistant rubber, PUR piston rod seals (PUR or FPM on request)
Spring	stainless steel
Fixing screws	plated zinc steel

Operational characteristics

Fluid	Filtered air. No lubrication needed, if applied it shall be continuous
Max. pressure	10 bar
Operating temperature	-5°C - +70°C with standard seals (magnetic or non magnetic piston) -30°C - +80°C with PUR seals (magnetic or non magnetic piston) -5°C - +80°C with FPM seals (magnetic piston) -5°C - +150°C with FPM seals (non magnetic piston)

Please follow the suggestions below to ensure a long life for these cylinders:
- use clean and lubricated air
- correct alignment during assembly with regard to the applied load so as to avoid radial components or bending the rod.
- avoid high speeds together with long strokes and heavy loads: this would produce kinetic energy which the cylinder cannot absorb, especially if used as a limit stop (in this case use mechanical stop device and aluminium piston)
- evaluate the environmental characteristics of cylinder used (high temperature, hard atmosphere, dust, humidity etc.)

Please note: air must be dried for applications with lower temperature.
Use hydraulic oils H class (ISO VG32) for correct continued lubrication.
Our Technical Department will be glad to help.

Stroke tolerance, minimum and maximum spring loads and cushioning length

Bore	Stroke tolerance	Minimum and maximum spring load		Cushioning length
(mm)	(mm)	(N)		(mm)
		min.	max.	
Ø32	+2 / 0 mm	19,6	25,5	6,5
Ø40		25,5	42,2	8
Ø50		44,1	96,3	7,5
Ø63	+2,5 / 0 mm	44,1	96,3	7,5

Standard stroke

DOUBLE ACTING BASIC and THROUGH ROD CYLINDER version

Bore	Stroke																										
	5	10	15	20	25	30	35	40	45	50	55	60	65	70	75	80	100	125	150	160	200	250	300	320	350	400	450	500
	WITHOUT CUSHIONING DEVICE																											
Ø32	●	●	●	●	●	●	●	●	●	●	●	●	●	●	●	●	●	●	●	●	●	●	●					
Ø40	●	●	●	●	●	●	●	●	●	●	●	●	●	●	●	●	●	●	●	●	●	●	●					
Ø50	●	●	●	●	●	●	●	●	●	●	●	●	●	●	●	●	●	●	●	●	●	●	●	●	●	●		
Ø63	●	●	●	●	●	●	●	●	●	●	●	●	●	●	●	●	●	●	●	●	●	●	●	●	●	●		
	WITH CUSHIONING DEVICE																											
Ø32					●	●	●	●	●	●	●	●	●	●	●	●	●	●	●	●	●	●	●					
Ø40					●	●	●	●	●	●	●	●	●	●	●	●	●	●	●	●	●	●	●					
Ø50					●	●	●	●	●	●	●	●	●	●	●	●	●	●	●	●	●	●	●	●	●	●		
Ø63					●	●	●	●	●	●	●	●	●	●	●	●	●	●	●	●	●	●	●	●	●	●		

DOUBLE ACTING THROUGH ROD CYLINDER BORED version

Bore	Stroke																											
	5	10	15	20	25	30	35	40	45	50	55	60	65	70	75	80	25	30	35	40	45	50	55	60	65	70	75	80
	WITHOUT CUSHIONING DEVICE																WITH CUSHIONING DEVICE											
Ø32	●	●	●	●	●	●	●	●	●	●							●	●	●	●	●	●						
Ø40	●	●	●	●	●	●	●	●	●	●							●	●	●	●	●	●						
Ø50	●	●	●	●	●	●	●	●	●	●	●	●	●	●	●		●	●	●	●	●	●	●	●	●	●	●	
Ø63	●	●	●	●	●	●	●	●	●	●	●	●	●	●	●		●	●	●	●	●	●	●	●	●	●	●	

Available versions

BASIC version

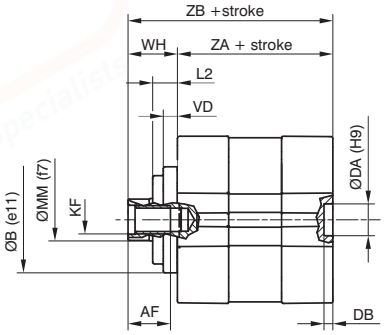

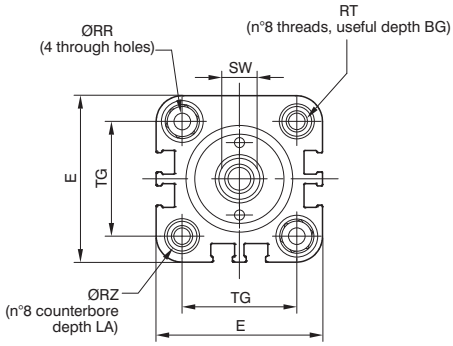

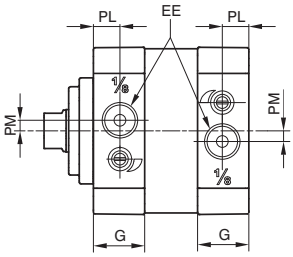

Sensor slot detail
type "B"
(n° 6 slots)

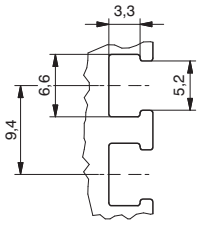

THROUGH ROD CYLINDER version

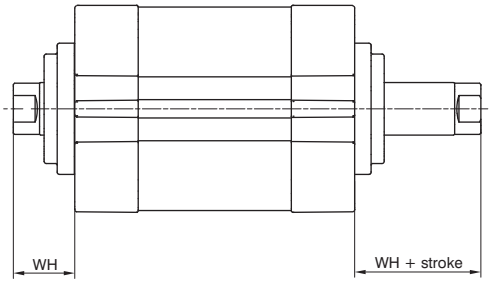

Ordering codes

15 _ _.Ø.stroke. _ _ . _

- **1** = Double acting, magnetic piston
- **4** = Double acting, non magnetic piston

- **0** = NBR seals and C43 chromed plated rod
- **1** = NBR seals and stainless steel rod
- **4** = PUR seals and C43 chromed plated rod
- **5** = PUR seals and stainless steel rod
- **6** = FPM seals and C43 chromed plated rod
- **7** = FPM seals and stainless steel rod

- **4** = Non-cushioned version (mechanical cushioning only)
- **5** = Versions with adjustable end of stroke cushioning system

**
- **10** = Basic, female threaded rod
- **11** = Basic, male threaded rod
- **12** = through rod, female threaded rod
- **13** = through rod, male threaded rod
- **14** = through rod, bored female threaded rod
- **15** = through rod, bored male threaded rod

** It is possible to order the Ø32 and Ø40 cylinders with an aluminium piston by replacing the '1' with '2' in the ordering code.
Example: 1540.32.10.10.1 (Acetyl Resin Piston)
1540.32.10.20.1 (Aluminium Piston version)

Seals compounds scheme
NBR: oil resistant nitrilic rubber seals
PUR: polyurethane seals
FPM: fluoropolymer rubber seals

Table of dimensions

Bore		Ø32	Ø40	Ø50	Ø63
AF (min)		12	16	20	20
ØB (e11)		30	35	40	45
BG		16	16	16	16
ØDA (H9)		9	9	12	12
DB (+0,1/0)		2,5	2,5	2,6	2,6
E (max)		47,5	55	66	78
EE		G1/8"	G1/8"	G1/8"	G1/8"
G		14,5	15	15	15
KF		M8	M10	M12	M12
LA (0/-0,1)		5	5	5	5
L2		7	7	10	10
ØMM (f 7)		12	16	20	20
PL (+0,1/0)		7,5	8	8	8
PM		3	/	/	/
ØRR (min)		5,1	5,1	6,6	6,6
RT		M6	M6	M8	M8
ØRZ (min)		8,5	8,5	10,5	10,5
SW (0/-0,1)		10	13	17	17
TG (±0,2)		32,5	38	46,5	56,5
VD		4	4	5	5
WH (±1)		14	14	18	18
ZA (±0,5)		44	45	45	49
ZB (+1/0)		58	59	63	67
Weight	stroke	240	330	530	700
gr.	every 5mm	13	17	24	27

Basic version male piston rod

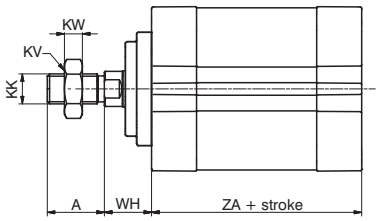

Through rod version male rod

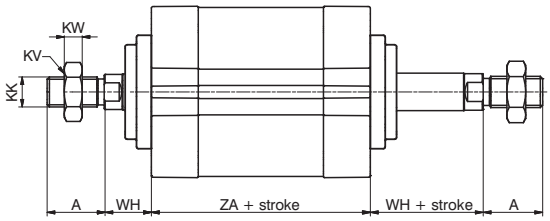

Through rod version bored female piston rod

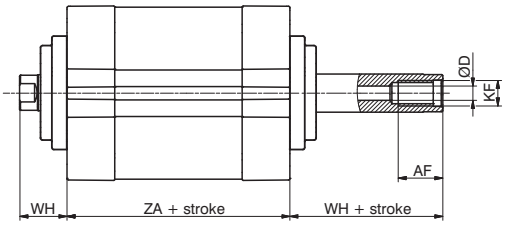

Through rod version bored male piston rod

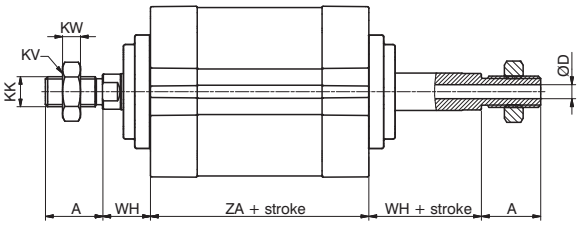

Bore	A (0/-0,5)	AF (min)	ØD	KF	KK	KV	KW	WH (±1)	ZA (±0,5)
Ø32	22	14	4,5	M8	M10x1,25	17	6	14	44
Ø40	24	18	4,5	M10	M12x1,25	19	7	14	45
Ø50	32	24	6	M12	M16x1,5	24	8	18	45
Ø63	32	24	6	M12	M16x1,5	24	8	18	49

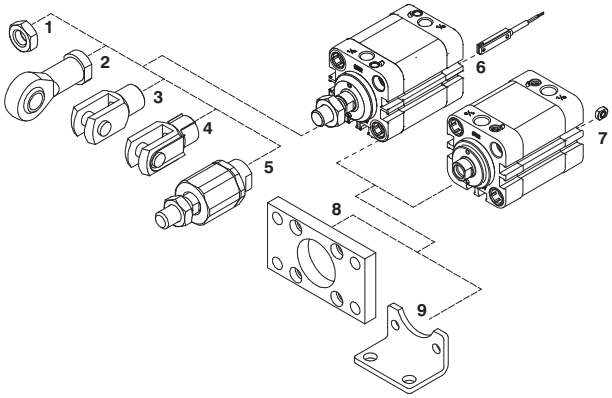

Sensor and piston rod accessories

Pos.	Description	Ordering code	
1	Rod lock nut	**1320.32.18F** **1320.40.18F** **1320.50.18F**	(Ø32) (Ø40) (Ø50-Ø63)
2	Ball joint	**1320.32.32F** **1320.40.32F** **1320.50.32F**	(Ø32) (Ø40) (Ø50-Ø63)
3	Fork	**1320.32.13F** **1320.40.13F** **1320.50.13F**	(Ø32) (Ø40) (Ø50-Ø63)
4	Fork with clips	**1320.32.13/1F** **1320.40.13/1F** **1320.50.13/1F**	(Ø32) (Ø40) (Ø50-Ø63)
5	Self aligning joint	**1320.32.33F** **1320.40.33F** **1320.50.33F**	(Ø32) (Ø40) (Ø50-Ø63)
6	Sensors	(See chapter 6 magnetic sensor)	
7	Valves direct mounting bolt	**1500.20F**	(Ø32 - Ø63)

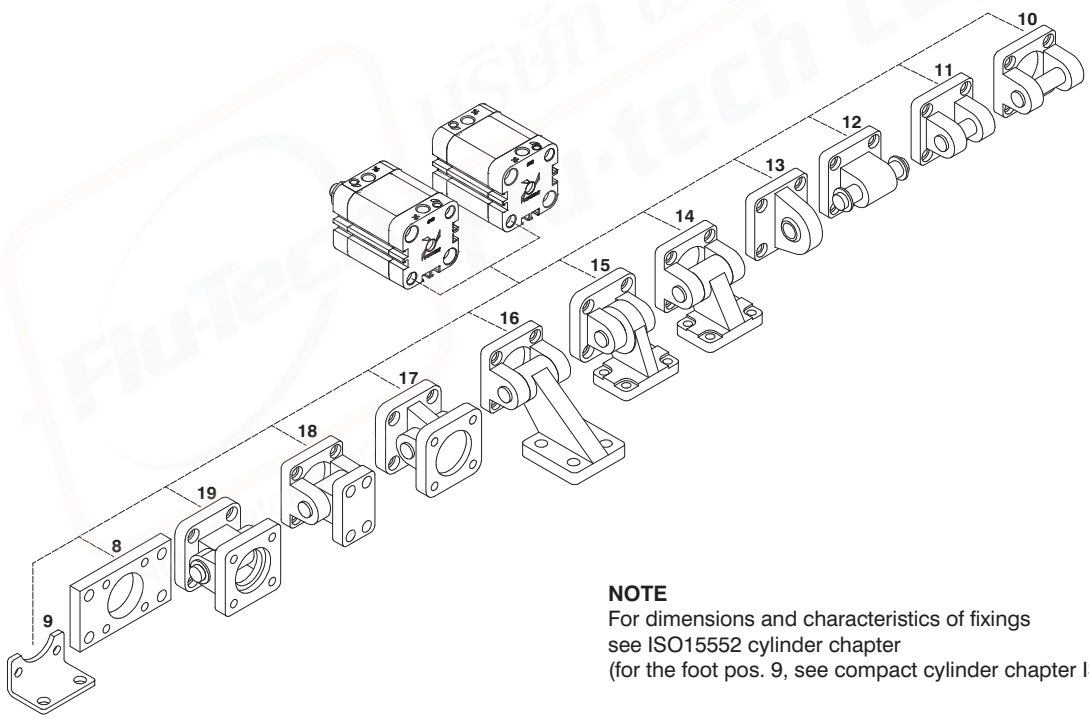

NOTE
For dimensions and characteristics of fixings
see ISO15552 cylinder chapter
(for the foot pos. 9, see compact cylinder chapter ISO 21287).

Fixing

Pos.	Description	Ordering code	
		Aluminium	Steel
8	Flange (MF2)	**1390.Ø.03FP**	**1380.Ø.03F**
9	Foot (MS1)	/	**1540.Ø.05/1F**
10	Rear female clevis (MP2)	**1380.Ø.09F**	**1320.Ø.20F**
11	Narrow rear female clevis (AB6)	**1380.Ø.30F**	**1320.Ø.29F**
12	Rear male clevis (MP4)	**1380.Ø.09/1F**	**1320.Ø.21F**
13	Rear male clevis (with jointed head - MP6)	**1380.Ø.15F**	**1320.Ø.25F**
14	Square angle trunnion (Ab7)	**1380.Ø.35F**	**1320.Ø.23F**
15	Square angle trunnion (with jointed head)	/	**1320.Ø.27F**
16	Square angle trunnion (not specified by ISO 15552)	**1380.Ø.11F**	/
17	Standard trunnion (with jointed head)	**1380.Ø.36F**	**1320.Ø.26F**
18	Standard trunnion (not specified by ISO 15552)	**1380.Ø.10F**	/
19	Complete standard trunnion	**1380.Ø.22F**	**1320.Ø.22F**

Admissible maximum radial load diagram

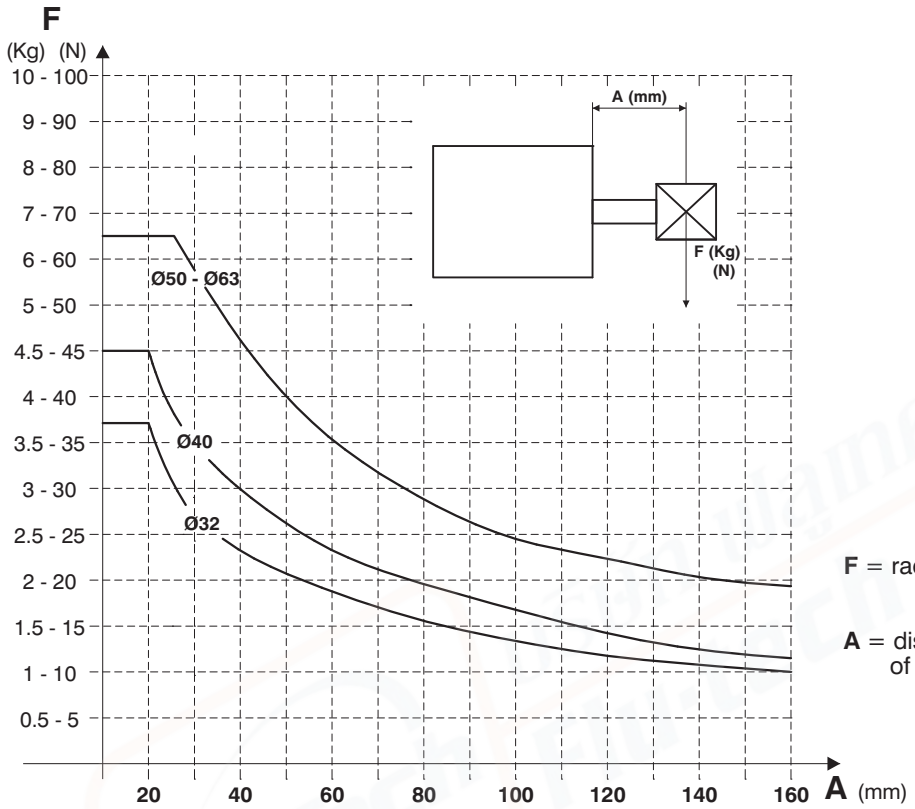

F = radial load (Kg and N)

A = distance between the load (F) centre of gravity and the cylinder front end cap

The diagram shows the maximum radial load F (in Newtons) that can be applied to the cylinder piston rod as a function of the distance **A** (in mm), under static conditions

End of stroke cushioning capacity diagram

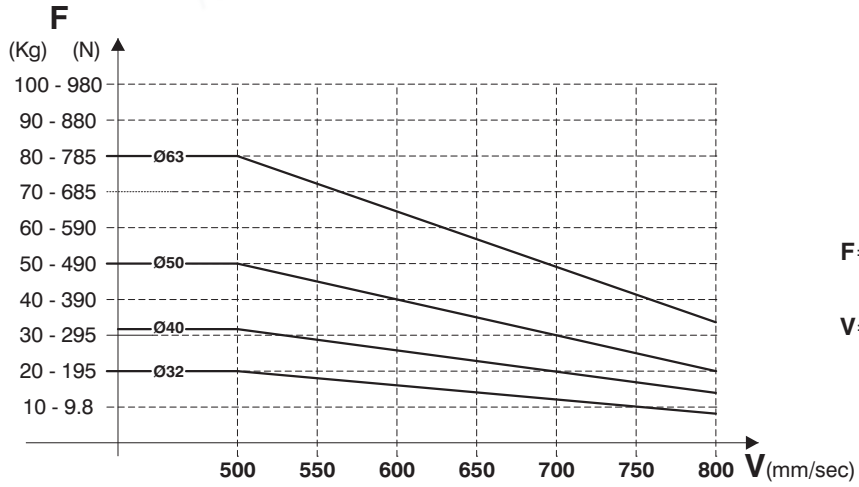

F= moved cylinder load (Kg and N)

V= load speed

The diagram shows, for each diameter, the safety curves relative to the maximum loads which can be moved by the cylinder in function of it's speed **V**. The data has been calculated under the following test conditions:
Cylinder mounted vertically with the rod pointing down, air pressure at 5 bar and with a guided load.
Important: Do not exceed the recommended values in the table as reduced life or damage to the cylinder may result.