PNEUMAX

PROCESS AUTOMATION TECHNOLOGY

CATALOGUE

WWW.FLUTECH.CO.TH SALES@FLUTECH.CO.TH + 66 (0) 2384-6060 + 66 (0) 2384-5701

Process automation technology Catalogue

Stainless steel and aluminum components and systems: valves and solenoid valves, components for air treatment and accessories for applications in the process industry

Pneumax

Smart Technologies and Human Competence

Founded in 1976, **Pneumax S.p.A.** is today one of the leading, international manufacturers of components and systems for automation. It is at the fore front of a group comprised of 25 companies, with over 730 employees worldwide.

Ongoing investment in research and development has allowed **Pneumax** to continually expand its range of standard products and customised solutions, adding to the well-established pneumatic technology, a range of electric drive actuators and fluid control components.

The desire to provide the service and specific application skills has led to the creation of 3 business units, dedicated to Industrial Automation, Process Automation and Automotive sector.

Pneumatic technology

Electric actuation

Fluid control

INDUSTRIAL AUTOMATION

PROCESS AUTOMATION TECHNOLOGY

AUTOMOTIVE

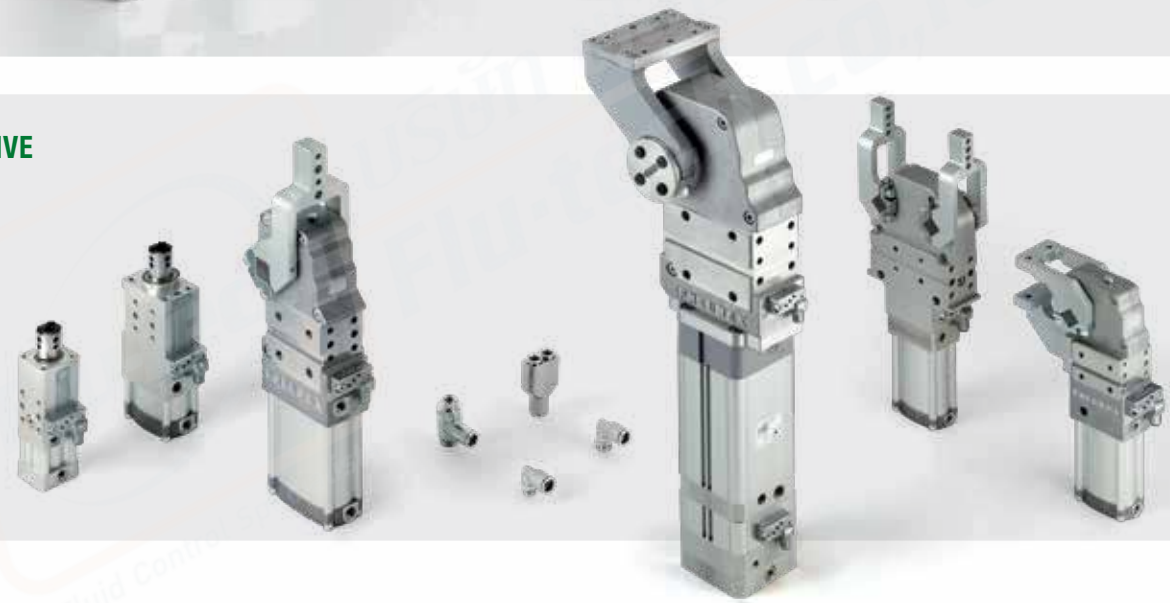

The ability to provide various technologies and solutions for each of our clients applications is the main objective of the Company, making Pneumax the ideal strategic partner.

What defines us is the "**Pneumax Business Attitude**", born out of the capacity to combine industry sectors, technology and our application skills via the clients collaboration with our business and product specialists.
The most effective solutions are studied around the TCO (Total cost of ownership) related to the entire life cycle of the product.
This represents the main Pneumax distinguishing factor.

Process automation technology

A wide range of standard components and customized solutions

Pneumax S.p.A. offer a wide range of engineered solutions and components for the process automation industry. These have been designed to meet the latest industry standards and customer specifications.
Long term performance and reliability are never compromised at Pneumax, a trustworthy partner to achieve full customer satisfaction for severe service and harsh environmental applications.

Pneumax products are designed and engineered in compliance with the latest international standards, following sophisticated and reliable prototyping as well as rigorous testing procedures to provide efficient and cost effective solutions. The combination of the latest technology and manufacturing experience allow Pneumax to add more products to their extensive portfolio with a wide range of components and services.

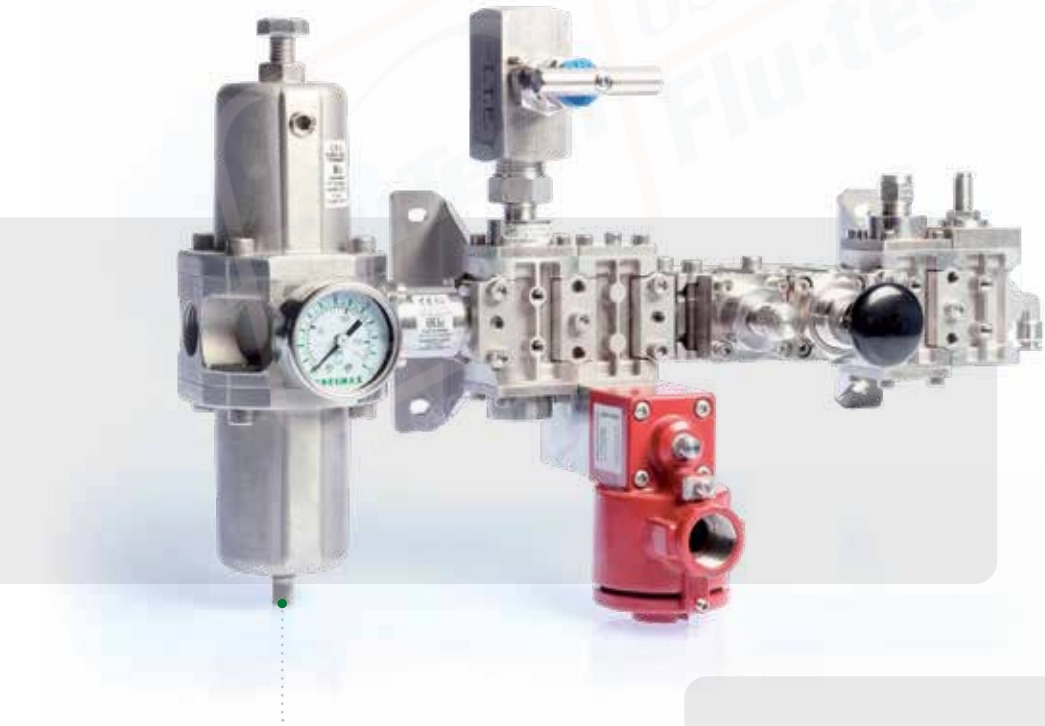

CUSTOMISED SOLUTIONS

Manifold and integrated systems

STANDARD PRODUCTS

Stainless steel and aluminium components

Application sectors

- Petrochemical
- Oil & gas
- Power generation
- Water treatment

Index 1/2

Process automation technology

Air service units series Airplus - aluminium
General 9
Filter 10
Filter regulator 15
Regulator 21
Air service units series 1700 Steel line
General 27
Regulator - Filter - Filter regulator size 2 28
Regulator - Filter - Filter regulator size 3 32
Regulator - Filter - Filter regulator size 4 36
Volume booster series Flowplus
General 40
Volume booster 41
Valves 1/4” NPT series Steel line
General 48
Valves 3/2, 1/4” NPT 50
Valves 5/2 - 5/3, 1/4” NPT 55
Solenoid valves 1/4” NPT series Steel line
General 60
Solenoid valves 3/2, 1/4” NPT 61
Solenoid valves 5/2, 1/4” NPT 62
Solenoid valves 1/4” NPT series Steel line - For safe area with IP66 stainless steel housing
General 63
Solenoid valves 3/2 - 5/2, 1/4” NPT 64
Solenoid valves 1/4” NPT series Steel line - IP66 Exd Explosion protection
General 68
Solenoid valves 3/2 - 5/2, 1/4” NPT 69
Solenoid valves 1/4” NPT series Steel line - Intrinsically safe Exia
General 73
Solenoid valves 3/2 - 5/2, 1/4” NPT 74
Accessories for series Steel line valves 78
Valves 1/2” NPT series Steel line
General 82
Valves 3/2, 1/2” NPT 83
Valves 5/2 - 5/3, 1/2” NPT 86
Solenoid valves 1/2” NPT series Steel line - For safe area with IP66 stainless steel housing
General 88
Solenoid valves 3/2 - 5/2, 1/2” NPT 89

Index 2/2

Process automation technology

Solenoid valves 1/2” NPT series Steel line - IP66 Exd Explosion protection
General 92
Solenoid valves 3/2 - 5/2, 1/2” NPT 93
Solenoid valves 1/2” NPT series Steel line - Intrinsically safe Exia
General 96
Solenoid valves 3/2 - 5/2, 1/2” NPT 97
Accessories for series Steel line valves 100
Pneumatic actuated valves series SA - aluminium
General 106
Pneumatic actuated valves 3/2 - 5/2, 1/4” NPT 107
Valves 3/2 - 5/2, 1/4” NPT push button version 109
Pneumatic actuated valves 3/2 - 5/2, 1/2” NPT 112
Pneumatic actuated valves 3/2 - 5/2, 1” NPT 114
Accessories for series SA valves - aluminium 116
Valves and Solenoid valves poppet system 1/2” NPT - 3/4” NPT - 1” NPT series SA - aluminium
General 119
Valves and Solenoid valves poppet system 3/2, 1/2” NPT - 3/4” NPT - 1” NPT 120
Valves and Solenoid valves poppet system 1 1/2” NPT series SA - aluminium
General 121
Valves and Solenoid valves poppet system 3/2, 1 1/2” NPT 122
Valves and Solenoid valves with “Namur” interface series 514
General 123
Valves and Solenoid valves with “Namur” interface G1/4” - 1/4” NPT 124
Valves and Solenoid valves with “Namur” interface series 515
General 131
Valves and Solenoid valves with “Namur” interface G1/4” - 1/4” NPT 132
Solenoid coils and accessories series 514 - 515 136

Air service units series Airplus - aluminium

- **Modular system**
- **Compact and linear design**
- **Maximum flexibility and reliability**
- **Plug-n-play connection thru couplig flanges**
- **Available in 3 sizes with connections from 1/4” to 1”**
- **ATEX certification (II 2GD)**

Construction and working characteristics
Pneumax AIRPLUS air treatment units have been designed and developed to increase reliability, modularity and user-friendly operation and installation.
This range of filters, regulators and filter regulators are constructed using a light weight aluminum body which ensures strength whilst at the same time making them suitable for a wide range of applications in temperatures from -40 to +80°C.
The filters operated in pressures up to 12 bar with filtration available from 5 to 50 microns.
Pneumax Airplus air treatment units can be integrated with safety elements that comply with EN-ISO 13849-1 and CE marking according to EU Machinery Directive, Annex V.
AIRPLUS air treatment units are available in 3 different sizes, with connections from 1/4 “to 1” BSP and NPT and flow rates performances up to 8000Nl/min.

Instruction for installation and operation
The FRL unit should be installed as close as possible to the ‘point of use’. The air flow direction should follow the direction indicated on the individual modules, following threaded connections (IN and OUT). Units fitted with a with bowl should be mounted vertically with the bowl facing down.
All units should be operated in accordance to the specified pressure and temperature ranges and should never exceed 0.2 Hz max frequency whether pulsing inlet pressure occur.
Fittings shall be mounted according to the maximum torque specified.

Maintenance
To carry out maintenance which involves the removal of the caps or supports above the body and where the retaining screws are present, it is necessary to remove the cover plates beforehand. If you attempt to dis-assemble the caps or supports without removing the cover plates and retaining screws, the integrity and function of the device could be compromised.
Bowls, plugs and supports are assembled with a bayonet type mechanism. In order to remove them, rotate anti-clockwise until the mechanical stop is reached and then remove from the body (for the bowls firstly press down the green safety button).
Bowls and transparent parts can be cleaned with water and neutral soap. Do not use solvents or alcohol.
Filtering elements (present in filters and filter regulators) made of HDPE can be regenerated by washing and blowing them.
In order to remove them it is necessary to remove the bowl unscrew the filter element and replace it with a new one or clean it.
Lubricator oil recharge might be performed during normal operation (apart Size 1) depressurizing the bowl thru dedicated plug.
Pneumax suggest refilling oil directly into the bowl.
No others maintenance operation shall be carried out by client itself, due to complexity of the assembly and Pneumax dedicated post-maintenance testing activities.

PROCESS AUTOMATION TECHNOLOGY

Filters (F)

- Double filter action: air flow centrifugation and filter element
- Available in 3 sizes with flow rates up to 14000 Nl/min and connections from 1/4” to 1”
- Filtering cartridge made of HDPE available in three different filtration grades (5μm, 20μm, 50μm)
- Filter cartridge can be regenerated by washing / blowing it or replaced
- Bowl assembly via bayonet type quick coupling mechanism with safety button
- Semi-automatic or automatic drain
- Atex certification (II 2GD)
- Inlet pressures up to 20 bar

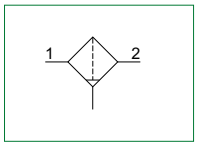

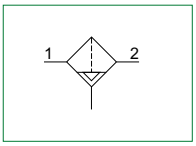

Note
In order to ensure that any fluid discharged by the auto drain assembly is adequately drained away, it is recommended you use a 6mm fitting and tube.

Technical characteristics				
Size		**Size 2**	**Size 3**	**Size 4**
Body and connections type		Aluminium body, integrated aluminium connections		
Protection and bowl type		Metal protection - PC bowl Metal protection - PA bowl Metal bowl (blind metal bowl)		
IN / OUT connections	**P and L version**	G3/8” - 1/4” NPT	G1/2” - 1/2” NPT	G1” - 1” NPT
Assembly configuration		Stand alone		Panel mounted
Assembly positions		Vertical ±5°		
Filter pore size		5 μm 20 μm 50 μm		
Bowl capacity		34 cm³	68 cm³	90 cm³
Condensation drain		Semi-automatic Automatic		
Max. fittings torque IN / OUT connections		G1/4” metal: 20Nm G3/8” metal: 25Nm	G3/8” metal: 25Nm G1/2” metal: 30Nm	G1”metal: 35Nm

Operational characteristics						
Size	**Size 2**	**Size 3**	**Size 4**	**Size 2**	**Size 3**	**Size 4**
Condensation drain	**Semi-automatic**			**Automatic**		
Maximum working pressure	20 bar (only with body and metal bowl)			16 bar (only with body and metal bowl)		
Minimum working pressure	0,5 bar			0,5 bar		
Working temperature	-5°C ... +50°C (technopolymer bowl) -30°C ... +80°C (only for P version and metal bowl) -40°C ... +80°C (only for L version and metal bowl)			-5°C ... +50°C		

Weights			
Size	Size 2	Size 3	Size 4
Aluminium body version, aluminium bowl protection and technopolymer bowl	344 g	514 g	1306 g
Aluminium body version and aluminium bowl	389 g	587 g	1330 g

Materials

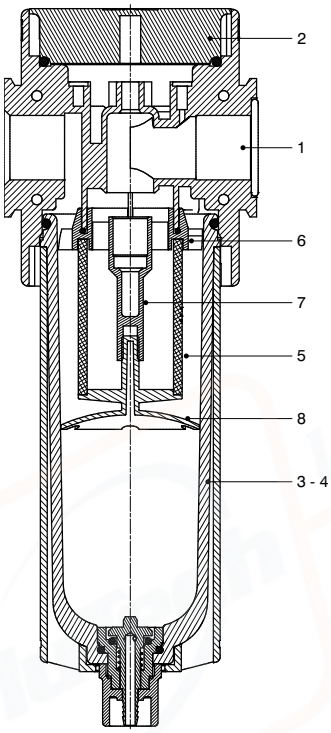

Filter		
1	Body	Polyamide Die-cast aluminium
2	Upper plug	Polyamide
3	Technopolymer bowl	Polycarbonate Polyamide
4	Metal bowl Bowl protection	Die-cast aluminium Die-cast aluminium
5	Filtering element	Polyethylene
6	Baffle	Acetal resin
7	Spool support	Acetal resin
8	Filtering element support	Acetal resin

Design

Size 2 - Size 3
Protection / Metal bowl

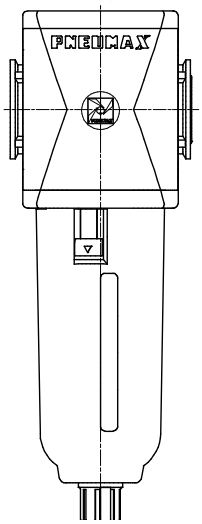

Size 4
All versions

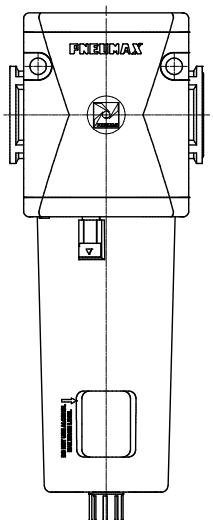

PROCESS AUTOMATION TECHNOLOGY

Order codes

P 17 3B F B S T

Version
P : Aluminum body
L : Aluminum body, low temperature

Size and connections
2B : Size 2 - G3/8”
2C : Size 2 - 1/4” NPT
3B : Size 3 - G1/2”
3C : Size 3 - 1/2” NPT
4B : Size 4 - G1”
4C : Size 4 - 1” NPT

Filter pore size
A : 5 μm
B : 20 μm
C : 50 μm

Condensation drain
: Semi-automatic drain
S : Automatic drain

Bowl options
P : Metal protection - PC bowl
R : Metal protection - PA bowl
T : Metal bowl

Example : P173BFBST : Size 3 filter G1/2” 20 μm, automatic drain and metal bowl

บริษัท ฟลูเทค จำกัด
FluTech Co.,ltd
Fluid Control Specialists

Flow charts

Flow rate chart

Size 2

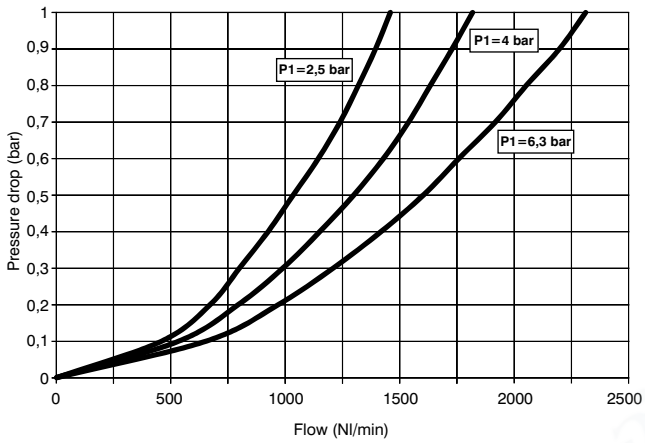

Flow rate chart

Size 3

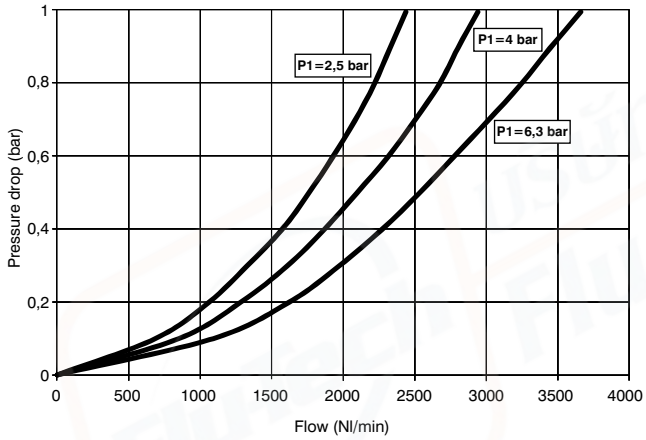

Flow rate chart

Size 4

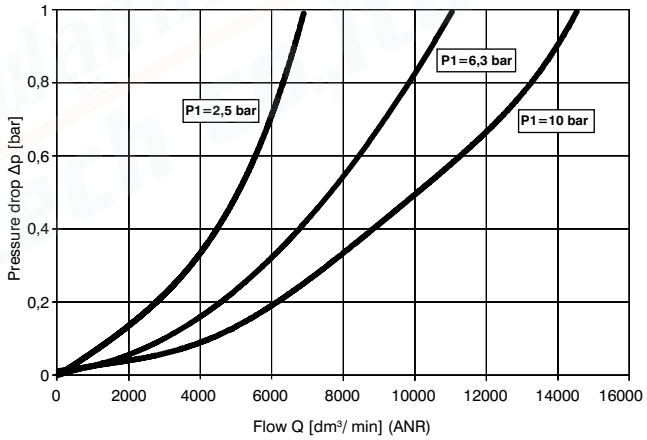

Dimensions

Semi-automatic drain version

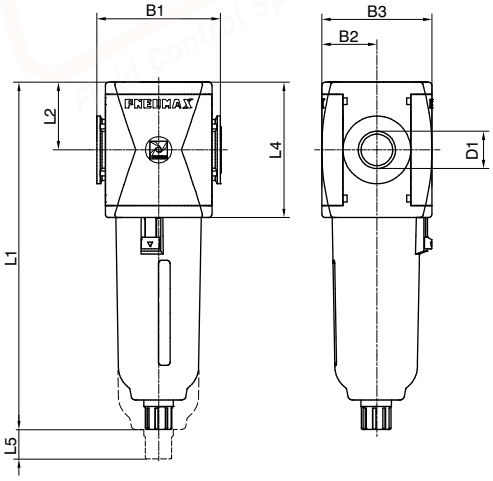

Fixing holes dimension detail
(only for size 4)

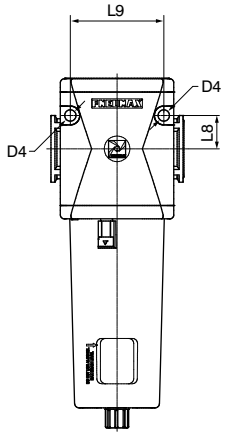

Model	B1	B2	B3	D1	D4	L1 - Bowl material		L2	L4	L5	L8	L9
						Technopolymer	Metal					
#172..	62	28,5	57	G3/8” 1/4” NPT	/	169,1	171,5	34	68	50	/	/
#173..	73	32,5	65	G1/2” 1/2” NPT	/	207,2	209,5	40	80	65	/	/
#174..	99	44	88	G1” 1” NPT	8,5	262	264,5	52,5	105	103	25	70

Variable dimensions

Semi-automatic drain version

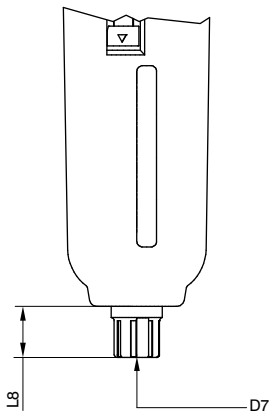

Automatic drain version

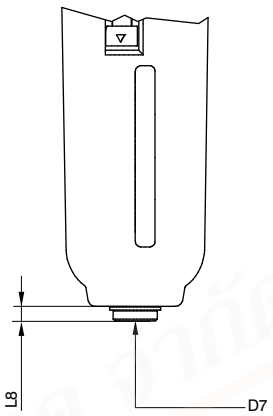

Model	L8 - Bowl material		D7
	Technopolymer	Metal	
Semi-automatic drain	15,7	18	Plastic hose connector
Automatic drain	2	4,5	G1/8”

บริษัท ฟลูเทค วาล์ว จำกัด
Flu-tech Co.,ltd
Fluid Control Specialists

Filter regulators (E)

- Filter - diaphragm pressure regulator with relieving
- Available in 3 sizes with flow rates up to 8000 Nl/min and connections from 1/4” to 1”
- Low histeresis rolling diaphragm and balanced spool
- Filtering element made of HDPE available in 3 different filtration grades (5μm, 20μm and 50μm)
- Bowl assembly via bayonet type quick coupling mechanism with safety button
- Semi-automatic or automatic drain
- Available in four pressure ranges up to 12 bar
- Fitted with panel mounting locking ring
- Atex certification (II 2GD)
- Inlet pressures up to 20 bar

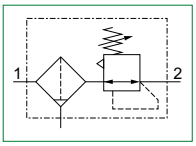

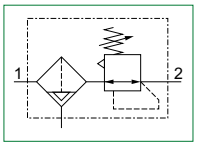

Note
For installations where a more accurate and constant pressure is required, the unit should be installed as close as possible to the point of use. In order to ensure that any fluid discharged by the auto drain assembly is adequately drained away, it is recommended you use a 6mm fitting and tube.

Technical characteristics				
Size		**Size 2**	**Size 3**	**Size 4**
Body and connections type		Aluminium body, integrated aluminium connections		
Protection and bowl type		Metal protection - PC bowl Metal protection - PA bowl Metal bowl (blind metal bowl)		
IN / OUT connections	**P and L version**	G3/8” - 1/4” NPT	G1/2” - 1/2” NPT	G1” - 1” NPT
Assembly configuration		Stand alone Panel mounting With fixing bracket /		Panel mounted
Assembly positions		Vertical ±5°		
Filter pore size		5 μm 20 μm 50 μm		
Pressure range		0-2 bar 0-4 bar 0-8 bar 0-12 bar		
Bowl capacity		34 cm^3	68 cm^3	90 cm^3
Condensation drain		Semi-automatic Automatic		
Regulation		Manul push and lock with pressure Manual lockable with accessories		
Pressure measurement		G1/8” - 1/8” NPT pressure gauge connection port (only for versions with IN / OUT NPT connections)		
Max. fittings torque IN / OUT connections		G3/8” metal: 25Nm	G1/2” metal: 30Nm	G1”metal: 35Nm
Max.fitting torque pressure gauge connection port		G1/8” metal: 15Nm		

Operational characteristics						
Size	**Size 2**	**Size 3**	**Size 4**	**Size 2**	**Size 3**	**Size 4**
Condensation drain	**Semi-automatic**			**Automatic**		
Maximum working pressure	20 bar (only with body and metal bowl)			16 bar (only with body and metal bowl)		
Minimum working pressure	0,5 bar			0,5 bar		
Working temperature	-5°C ... +50°C (technopolymer bowl) -30°C ... +80°C (only for P version and metal bowl) -40°C ... +80°C (only for L version and metal bowl)			-5°C ... +50°C		

Weights			
Size	Size 2	Size 3	Size 4
Aluminium body version, aluminium bowl protection and technopolymer bowl	510 g	730 g	1600 g
Aluminium body version and aluminium bowl	560 g	790 g	1620 g

Materials

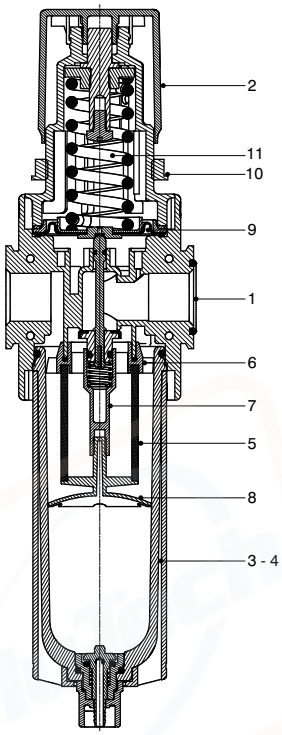

Filter regulator		
1	Body	Die-cast aluminium
2	Adjusting knob	Polyamide
3	Technopolymer bowl	Polycarbonate Polyamide
4	Metal bowl Bowl protection	Die-cast aluminium Die-cast aluminium
5	Filtering element	Polyethylene
6	Baffle	Acetal resin
7	Spool support	Acetal resin
8	Filtering element support	Acetal resin
9	Diaphragm	NBR
10	Panel mounting locking ring	Polyamide
11	Adjusting spring	Steel

Design

Size 2 - Size 3
Protection / Metal bowl

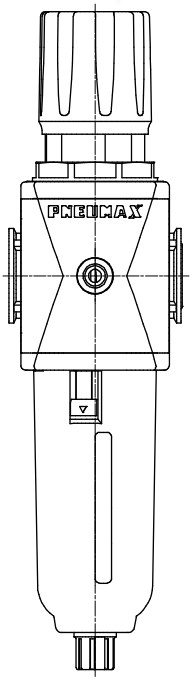

Size 4
All versions

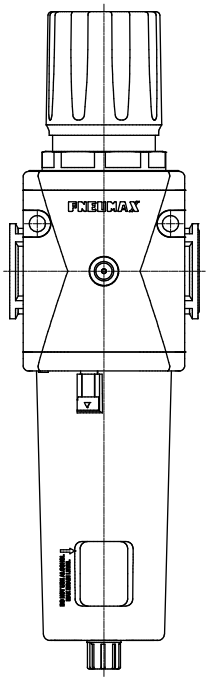

Order codes

P	17	3B	E	B	D	S			T

Version
P : Aluminum body
L : Aluminum body, low temperature

Size and connections
2B : Size 2 - G3/8”
2C : Size 2 - 1/4” NPT
3B : Size 3 - G1/2”
3C : Size 3 - 1/2” NPT
4B : Size 4 - G1”
4C : Size 4 - 1” NPT

Filter pore size
A : 5 μm
B : 20 μm
C : 50 μm

Pressure range
A : 0 - 2 bar
B : 0 - 4 bar
C : 0 - 8 bar
D : 0 - 12 bar

Condensation drain
: Semi-automatic drain
S : Automatic drain

Relieving options
: With relieving
L : Without relieving

Knob options
: Non-lockable version
K : Lockable version
U : Lockable version with universal key

Bowl options
P : Metal protection - PC bowl
R : Metal protection - PA bowl
T : Metal bowl

Example : P173BEBDST : Size 3 filter regulator G1/2” 20 μm 0 - 12 bar, automatic drain and metal bowl

PROCESS AUTOMATION TECHNOLOGY

Flow charts

Size 2 - G3/8" 0-8 bar P1=7 bar

Flow rate chart

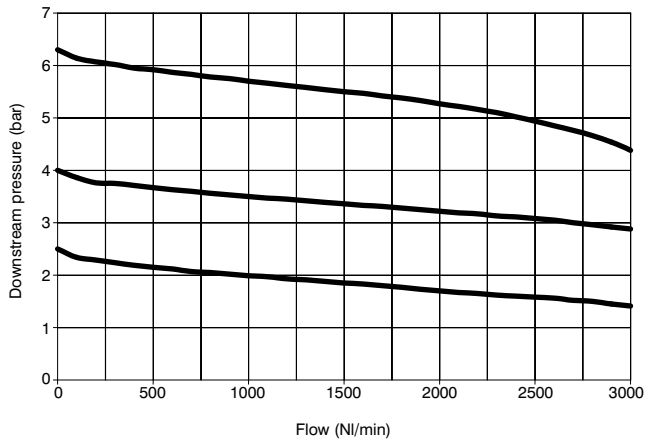

Adjustment characteristic

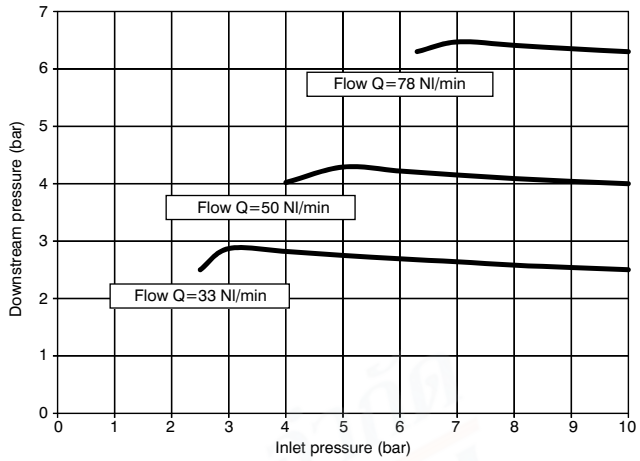

Size 3 - G1/2" 0-8 bar P1=7 bar

Flow rate chart

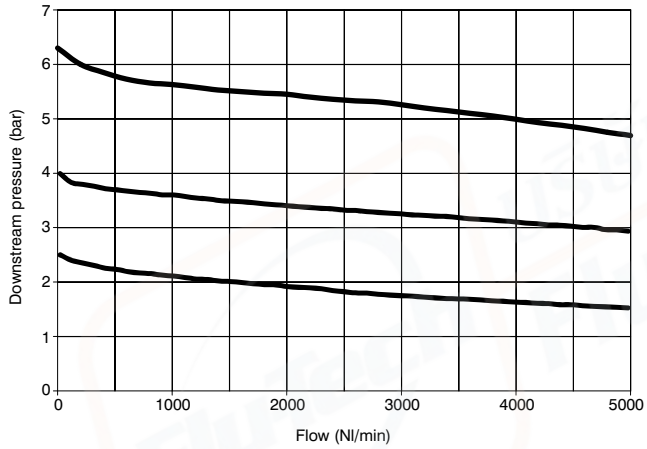

Adjustment characteristic

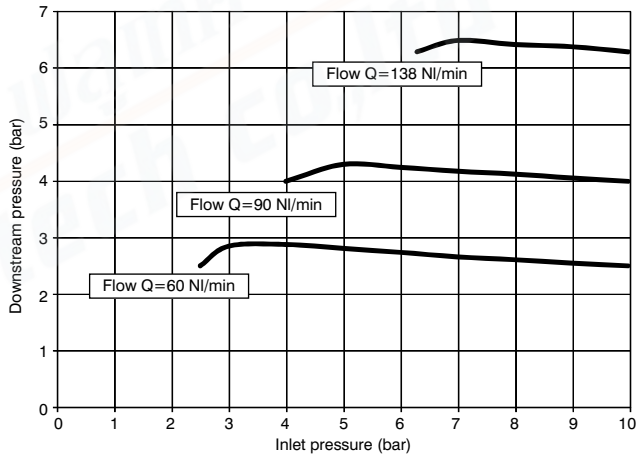

Size 4 - G1" 0-8 bar P1=10 bar

Flow rate chart

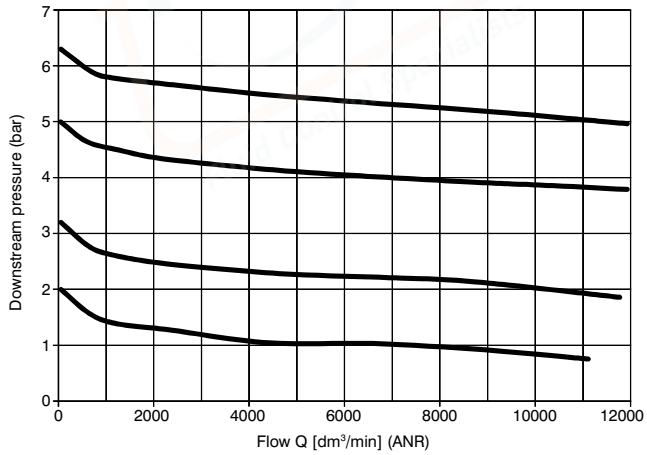

Adjustment characteristic

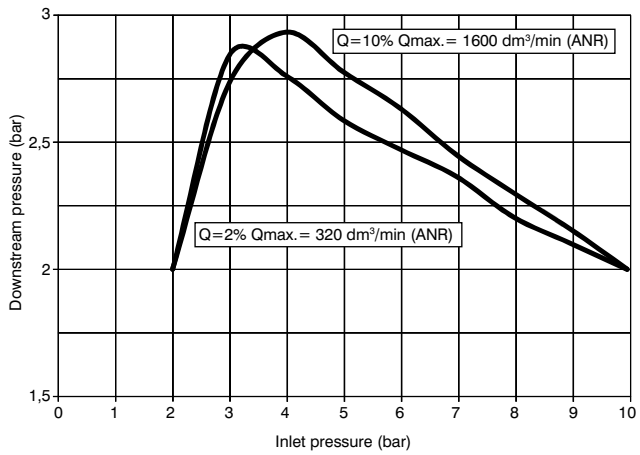

Dimensions

Semi-automatic drain version

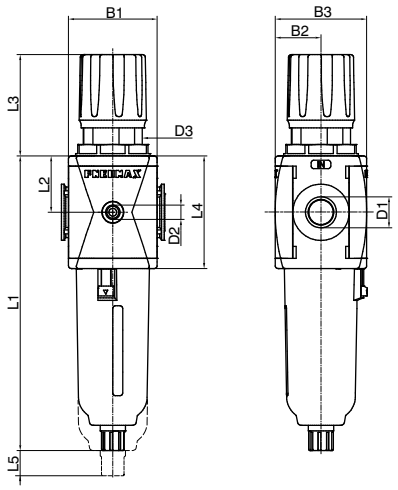

Fixing holes dimension detail
(only for size 4)

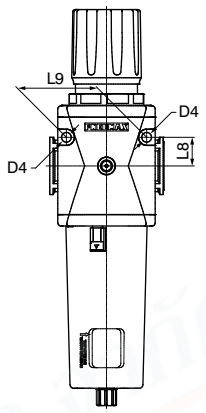

Model	B1	B2	B3	D1	D2	D3	D4	L1 - Bowl material		L2	L3	L4	L5	L8	L9
								Technopolymer	Metal						
#172..	62	28,5	57	G3/8” 1/4” NPT	G1/8” 1/8” NPT	M42x1,5	/	169,1	171,5	34	71,8	68	50	/	/
#173..	73	32,5	65	G1/2” 1/2” NPT	G1/8” 1/8” NPT	M42x1,5	/	207,2	209,5	40	72,8	80	65	/	/
#174..	99	44	88	G1” 1” NPT	G1/8” 1/8” NPT	M54x1,5	8,5	262	264,5	52,5	87,5	105	103	25	70

Variable dimensions

Semi-automatic drain version

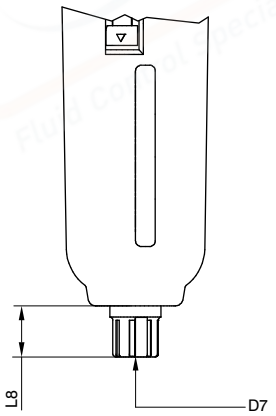

Automatic drain version

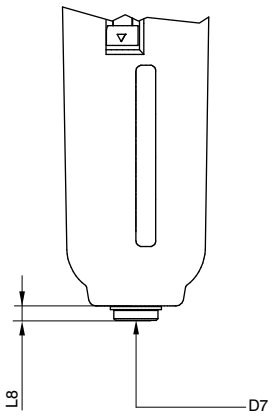

Model	L8 - Bowl material		D7
	Technopolymer	Metal	
Semi-automatic drain	15,7	18	Plastic hose connector
Automatic drain	2	4,5	G1/8”

Fixing bracket

T172	50

Size
T172 : Size 2 - Size 3

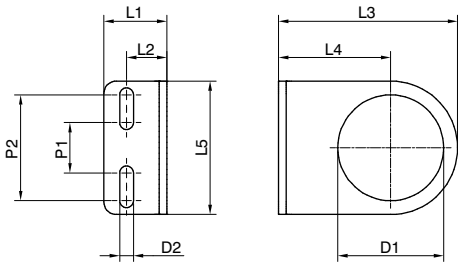

Model	L1	L2	L3	L4	L5	D1	D2	P1	P2
T17250	25	16	71	44,5	53	42	5,5	20	42

บริษัท ฟลูเทค จำกัด
Flu-tech co.,ltd
Fluid Control Specialists

Regulators (R)

- Diaphragm pressure regulator with relieving
- Available in 3 sizes with flow rates up to 8000 Nl/min and connections from 1/4” to 1”
- Low histeresis rolling diaphragm and balanced spool
- Available in four pressure ranges up to 12 bar
- Fitted with panel mounting locking ring
- Atex certification (II 2GD)
- Inlet pressures up to 20 bar

Note
For installations where a more accurate and constant pressure is required, the unit should be installed as close as possible to the point of use.

Technical characteristics				
Size		**Size 2**	**Size 3**	**Size 4**
Body and connections type		Aluminium body, integrated aluminium connections		
IN / OUT connections	**P and L version**	G3/8” - 1/4” NPT	G1/2” - 1/2” NPT	G1” - 1” NPT
Assembly configuration		Stand alone Panel mounting With fixing bracket /		Panel mounted
Assembly positions		Indifferent		
Pressure range		0-2 bar 0-4 bar 0-8 bar 0-12 bar		
Regulation		Manul push and lock with pressure Manual lockable with accessories		
Pressure measurement		G1/8” - 1/8” NPT pressure gauge connection port (only for versions with IN / OUT NPT connections)		
Max. fittings torque IN / OUT connections		G3/8” metal: 25Nm	G1/2” metal: 30Nm	G1”metal: 35Nm
Max.fitting torque pressure gauge connection port		G1/8” metal: 15Nm		

Operational characteristics			
Size	**Size 2**	**Size 3**	**Size 4**
Maximum working pressure	20 bar		
Minimum working pressure	0.5 bar		
Working temperature	-30°C ... +80°C (only for P version) -40°C ... +80°C (only for L version)		

Weights			
Size	Size 2	Size 3	Size 4
Aluminium body version	400 g	560 g	1260 g

Materials

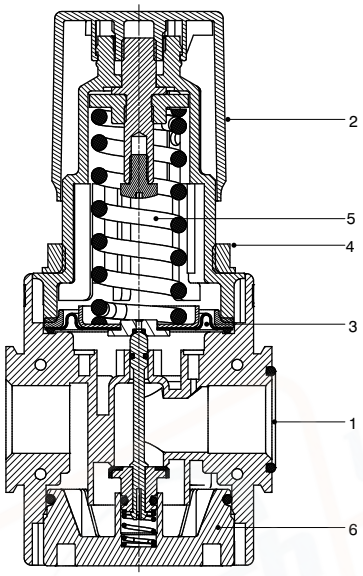

Regulator		
1	Body	Polyamide Die-cast aluminium
2	Adjusting knob	Polyamide
3	Diaphragm	NBR
4	Panel mounting locking ring	Polyamide
5	Adjusting spring	Steel
6	Rear end cap	Polyamide / Die-cast aluminium

Design

Size 2 - Size 3

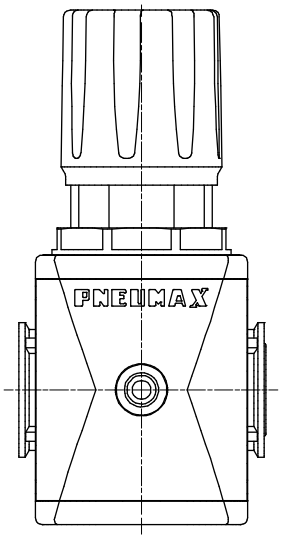

Size 4
All versions

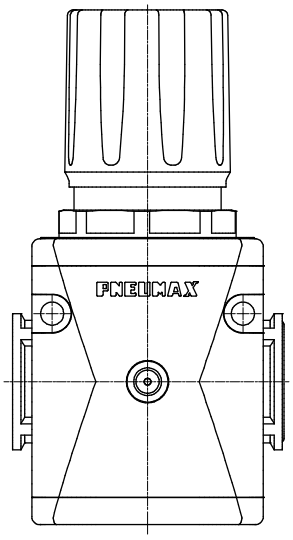

Order codes

P	17	3B	R	D		

Version
P : Aluminum body
L : Aluminum body, low temperature

Size and connections
2B : Size 2 - G3/8”
2C : Size 2 - 1/4” NPT
3B : Size 3 - G1/2”
3C : Size 3 - 1/2” NPT
4B : Size 4 - G1”
4C : Size 4 - 1” NPT

Pressure range
A : 0 - 2 bar
B : 0 - 4 bar
C : 0 - 8 bar
D : 0 - 12 bar

Relieving options
: With relieving
L : Without relieving

Knob options
: Non-lockable version
K : Lockable version
U : Lockable version with universal key

Example : P173BRD : Size 3 regulator G1/2” 0 - 12 bar

Flu-Tech Fluid Control Specialists

PROCESS AUTOMATION TECHNOLOGY

Flow charts

Size 2 - G3/8" 0-8 bar P1=7 bar

Flow rate chart

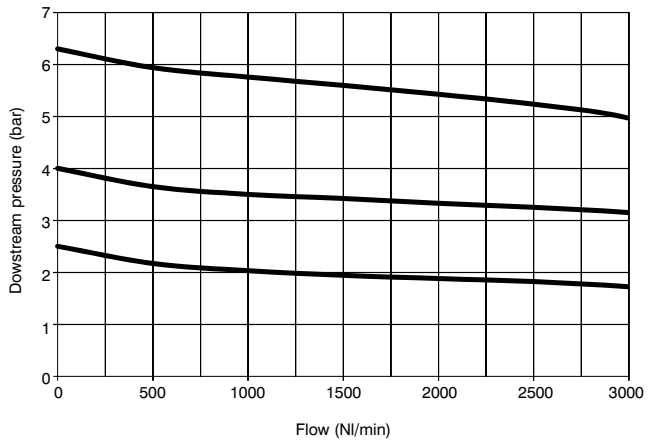

Adjustment characteristic

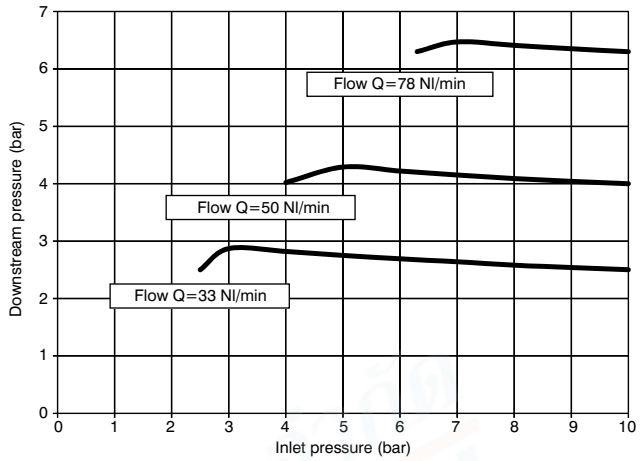

Size 3 - G1/2" 0-8 bar P1=7 bar

Flow rate chart

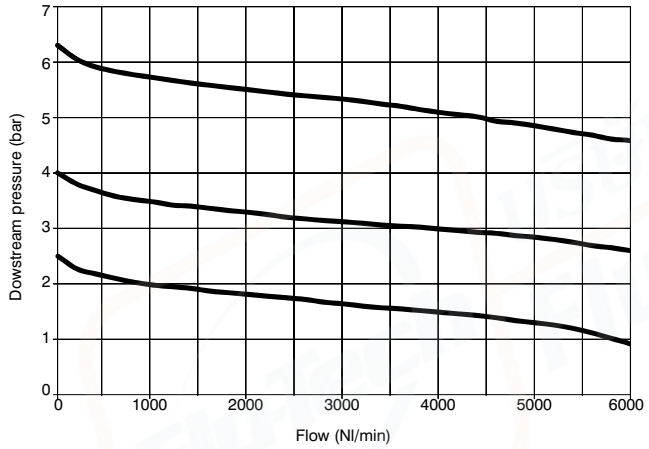

Adjustment characteristic

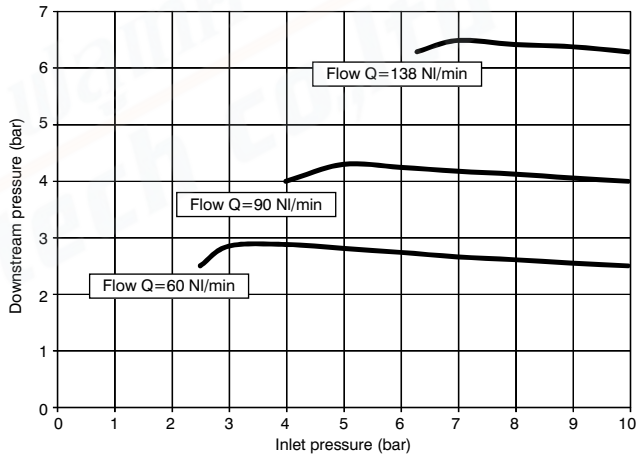

Size 4 - G1" 0-8 bar P1=10 bar

Flow rate chart

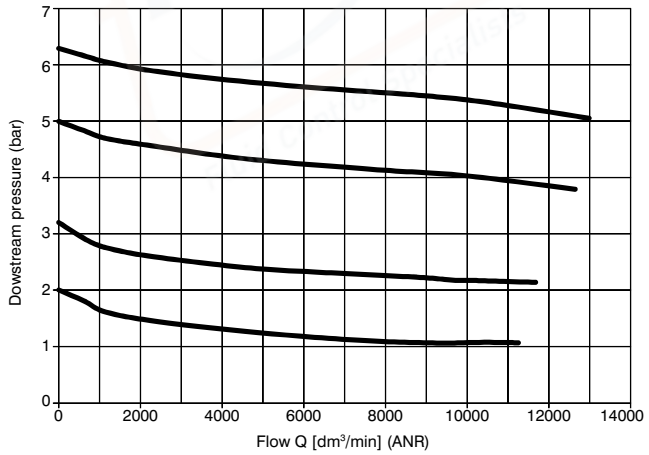

Adjustment characteristic

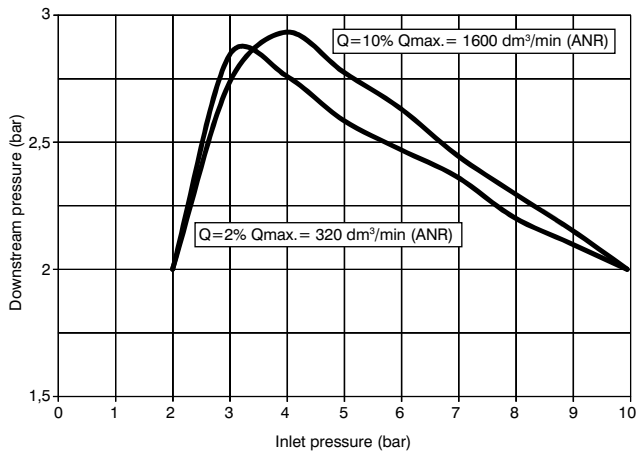

Dimensions

Pressure gauge connection port version

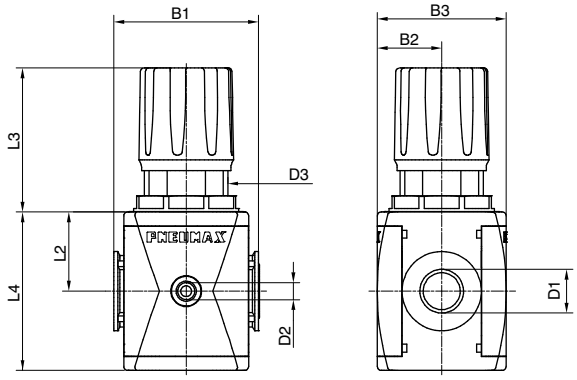

Fixing holes dimension detail
(only for size 4)

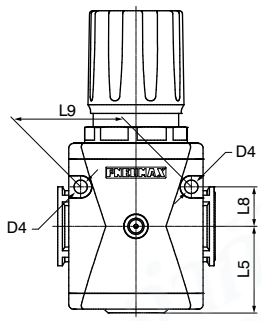

Model	B1	B2	B3	D1	D2	D3	D4	L2	L3	L4	L5	L8	L9
#172..	62	28,5	57	G3/8" 1/4" NPT	G1/8" 1/8" NPT	M42x1,5	/	34	71,8	68	/	/	/
#173..	73	32,5	65	G1/2" 1/2" NPT	G1/8" 1/8" NPT	M42x1,5	/	40	72,8	80	/	/	/
#174..	99	44	88	G1" 1" NPT	G1/8" 1/8" NPT	M54x1,5	8,5	52,5	87,5	105	54,5	25	70

Fixing bracket

T172 **50**

Size
T172 : Size 2 - Size 3

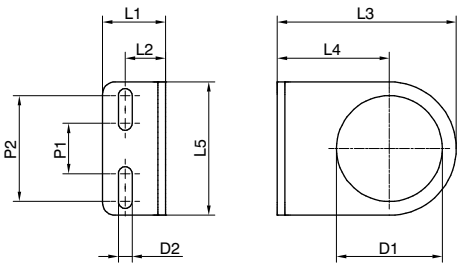

Model	L1	L2	L3	L4	L5	D1	D2	P1	P2
T17250	25	16	71	44,5	53	42	5,5	20	42

Quick coupling flanges

Pneumax Airplus quick coupling flanges series allow both module rapid fixing and panel mounted configuration. Due to its design, Pneumax connection flanges allow user-friendly maintenance activities with no need of entire manifold disassembling procedure.
Two types of flange are available: X type flange for assembling the modules together, and Y type flange suitable for panel mounted also. Both types are made of die-cast aluminum.

Aluminium flanges

Flange Y

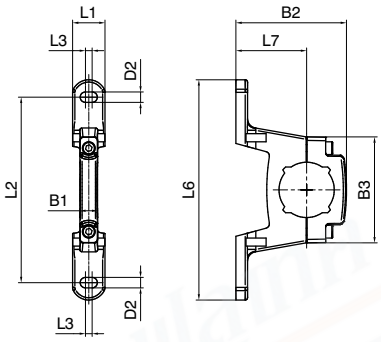

Flange X

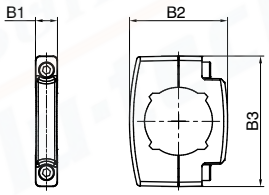

Model	B1	B2	B3	D2	L1	L2	L3	L4	L5	L6	L7
N172Y	9,7	64,6	55,6	Ø5,2	18	95	6,8	/	86,5	117,9	40,5
N172X		55,6		/	/	/	/	96,5	72,5	/	/
N173Y	9,7	75,5	56	Ø5,2	18	110	6,8	/	98,3	133	44,5
N173X		62		/	/	/	/	112,8	85	/	/
N174Y	13,7	106,5	102	Ø8,5	25	148	6,5	/	133,5	175	64
N174X		85		/	/	/	/	153,5	112	/	/

Air service units series 1700 Steel line

General

The stainless steel SS1700 air treatment series has been engineered and developed to approach specifically the OIL & GAS industry and more widely for all the severe service applications that require excellent corrosion resistance due to chemical and/or harsh environmental condition.
All external and internal parts (except for the automatic drain version) are AISI 316L stainless steel material in compliance with NACE standard MR0175/ISO 15156/1. The product range includes FILTER, with filtration elements up to 3 filtration degree (5μm-20 μm-50 μm), available in AISI316 stainless steel or HDPE (high density polyethylene), and manual or automatic condensed exhaust; The PRESSURE REGULATOR is supplied with low hysteresis rolling diaphragm and an over-pressure exhaust valve (RELIEVING), available in 4 different adjustment ranges from 0 to 12 bar. As a last the FILTER REGULATOR range, which combines the features of a filter and pressure regulator into a one single device. “CLEAN PROFILE” version is available for all the sizes, featuring a glossy finish on the external surface. The over-pressure exhaust hole (RELIEVING) has a 1/8” NPT threading, and it is protected by an AISI 316 sintered filter series. Note: for CLEAN PROFILE series this is a simple unthread hole.

Construction and operational characteristics

Body, bowl and adjustment mechanism	AISI 316L stainless steel
Caseback regulator	AISI 316L stainless steel
Adjustment screw, locking nut and fastening screws	AISI 316L stainless steel (stainless steel A4-70)
Internal components	AISI 316L stainless steel
Filtering elements	AISI 316 stainless steel or HDPE (High density polyethylene)
Spring	AISI 316 stainless steel
Seals	

NBR (standard versions and automatic drain)	NBR for low temperatures (L versions)	Silicone - PU (Z version)
FPM - HNBR (H versions)	EPDM-FDA (EF versions)	

Automatic drain	Brass, stainless steel AISI 304 and AISI 302, sintered bronze Acetal resin , NBR, FPM

Operating Range

Fluid	Filtered air. No lubrication needed, if applied it shall be continuous. Inert gases. Natural gases

Temperature

-30°C ... +80°C (standard version)	-5°C ... +150°C (high temperature H version)	-40°C ... +100°C (EPDM-FDA version)
-50°C ... +80°C (low temperature L version)	-5°C ... +70°C (automatic drain S version)	
-60°C ... +80°C (low temperature version -60 °C Z)	-5°C ... +70°C (reduced orifice automatic drain SR version)	

Maximum working pressure

20 bar (standard, low and high temperature versions)	16 bar (automatic drain version)	10 bar (reduced orifice automatic drain version)

Instructions for installation and use

Product shall be installed reducing the distance from inlet point. Check and install the device following the flow direction (clearly marked with an arrow stamped on the body). Vertical position installation with condensed exhaust tap pointing downward is recommended.
Devices must be used in compliance with pressure and temperature operating range. To set the pressure there is an adjustable knob, located on the top of the device. Pneumax recommend selection of pressure regulator adjusting range option in line with client required performance
The condensed exhaust action for the manual drain version shall be performed only in the absence of pressure. To discharge liquid, turn the tap clockwise until the discharge of liquid is triggered, then tighten it all the way.

Maintenance

Filtration elements and filter regulator are reusable through blowing and/or washing and is made of stainless steel or HDPE (high density polyethylene). To replace, remove the cup, loosen the set screw of the support and replace the filter element with a new one or refurbished one. Replace the regulator diaphragm whenever the performance is compromised or if there is a continuous discharge from the relieving hole (over-pressure exhaust). Fully discharge the adjustment spring before removing the adjustment mechanism. For other maintenance activities, due to complexity of assembly and requirement for dedicated **PNEUMAX** testing activities, it is strongly recommended to contact the manufacturer.

Certifications available

Ex : CE Ex **II 2 GD c IIC**

CE Ex **II 2G Ex h IIC Gb**
CE Ex **II 2D Ex h IIIC Db**

SIL : Suitable up to SIL 3

EAC Ex : CU - TR 012

PROCESS AUTOMATION TECHNOLOGY

Filters

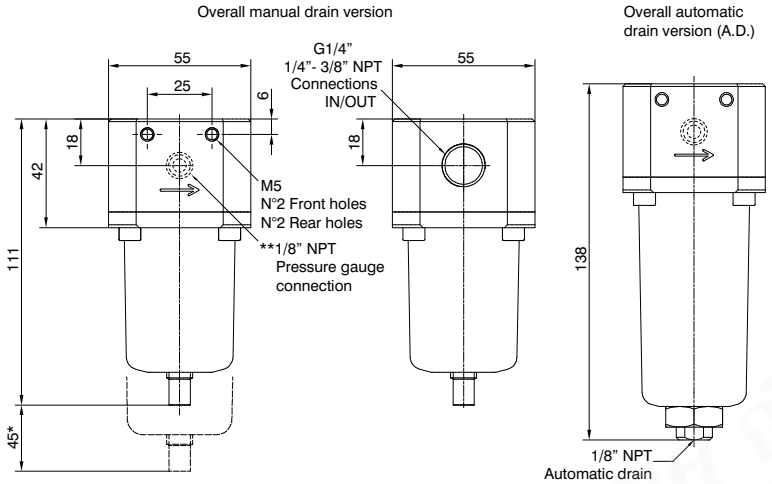

* = BOWL REMOVAL MAXIMUM HEIGHT
** = ONLY FOR VERSION WITH PRESSURE GAUGE CONNECTION

Ordering code	
S V 172 C F S O Z	
V	VERSION
	S = Standard surface finishing
	F = Clean profile
C	CONNECTIONS
	A = 1/4" NPT
	B = 3/8" NPT
	C = G1/4"
S	FILTER PORE SIZE
	A = 5 µm - 316 stainless steel
	B = 20 µm - 316 stainless steel
	C = 50 µm - 316 stainless steel
	D = 5 µm - HDPE
	E = 20 µm - HDPE
	F = 50 µm - HDPE
O	OPTIONS
	= Standard*
	L = Low temperature
	Z = Low temperature (-60 °C)
	H = High temperature
	S = Automatic drain
	SR = Reduced orifice automatic drain
	EF = EPDM-FDA
Z	ENCLOSURE OPTIONS
	= Standard*
	G = pressure gauge connection

* no additional letter required

Construction characteristics
- Body, bowl and internal components in AISI 316L stainless steel. - A4 (AISI 316) stainless steel fixing screws. - Manual or automatic condensed drain.

Technical characteristics	
Maximum inlet pressure (standard version)	20 bar
Maximum inlet pressure (automatic drain version)	16 bar
Maximum inlet pressure (reduced orifice automatic drain version)	10 bar
Temperature (standard version)	-30°C ... +80°C
Temperature (low temperature version)	-50°C ... +80°C
Temperature (low temperature version -60 °C)	-60°C ... +80°C
Temperature (high temperature version)	-5°C ... +150°C
Temperature (automatic and reduced orifice drain version)	-5°C ... +70°C
Temperature (EPDM-FDA version)	-40°C ... +100°C
Weight	1070 (gr.)
Bowl capacity	15 cm³
Assembly positions	Vertical

Flow rate chart

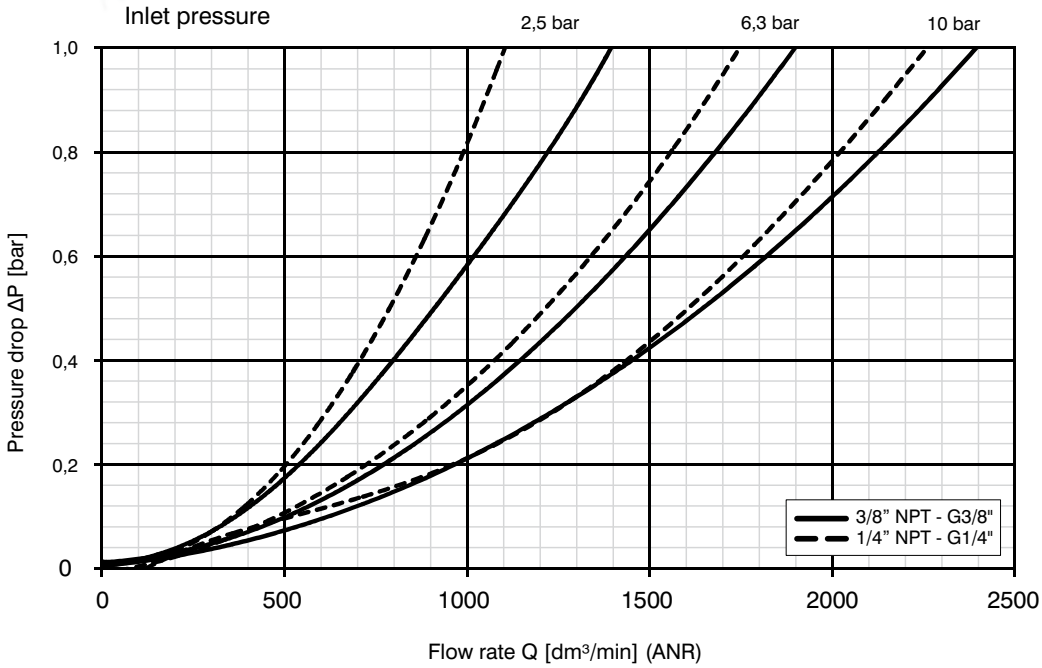

Regulators

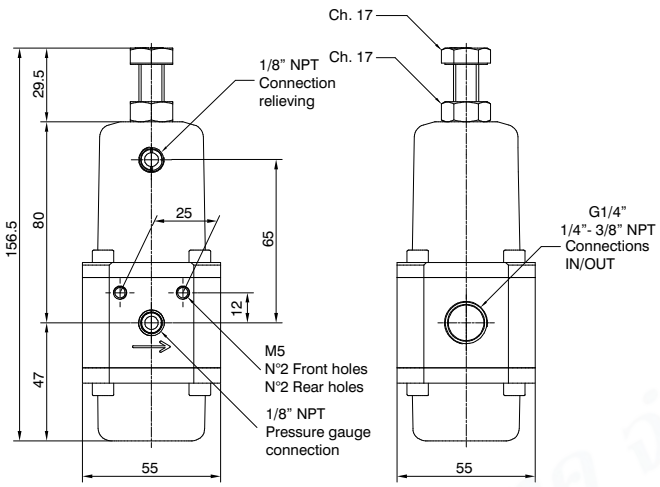

Ordering code	
S V 172 C R G T O	
V	VERSION
	S = Standard surface finishing
	F = Clean profile
C	CONNECTIONS
	A = 1/4" NPT
	B = 3/8" NPT
	C = G1/4"
G	PRESSURE RANGE
	A = 0-2 bar
	B = 0-4 bar
	C = 0-8 bar
	D = 0-12 bar
T	TYPE
	= Standard*
	N = Without relieving
O	OPTIONS
	= Standard*
	L= Low temperature
	Z = Low temperature (-60 °C)
	H= High temperature
	EF= EPDM-FDA

* no additional letter required

Construction characteristics

- Body, adjustment mechanism, AISI 316L stainless steel and caseback inter. components
- AISI 316 stainless steel adjustment springs.
- Fixing screws, adjustment screws and locknut in A4 (AISI 316) stainless steel.
- Pressure regulator diaphragm with over-pressure drain (Relieving).
- Low hysteresis rolling diaphragm.
- Balanced system.

Note

The pressure must be always regulating while increasing. For a more precise regulation and higher sensibility, the use of a regulator with a pressure range as close as possible to the regulated pressure is recommended.

Technical characteristics

Maximum inlet pressure (standard version)	20 bar
Temperature (standard version)	-30°C ... +80°C
Temperature (low temperature version)	-50°C ... +80°C
Temperature (low temperature version -60 °C)	-60°C ... +80°C
Temperature (high temperature version)	-5°C ... +150°C
Temperature (EPDM-FDA version)	-40°C ... +100°C
Pressure gauge connection	1/8" NPT
Weight	1270 (gr.)
Assembly positions	Indifferent

Flow rate chart

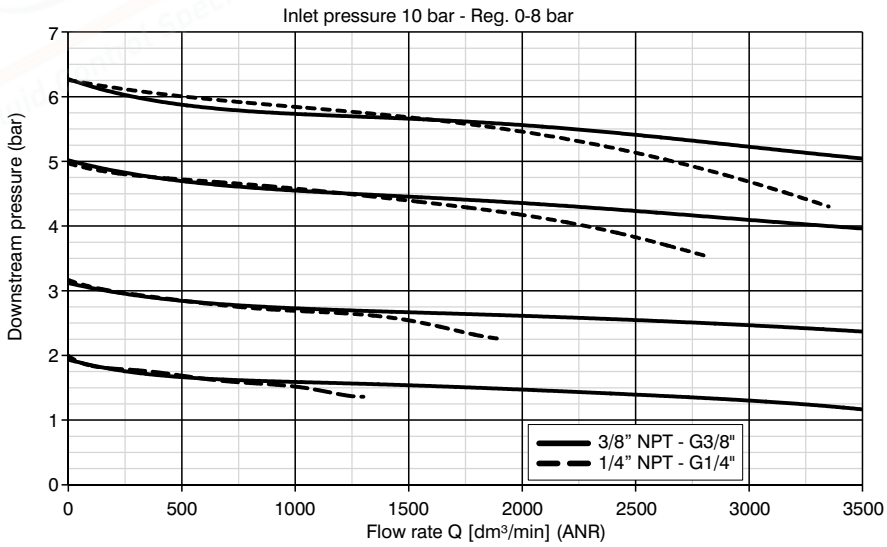

Pressure regulator Stainless steel line have been designed to withstand **a 60 bar** maximum inlet pressure.
Maximum regulated outlet pressure is 20 bar.
For performance details please refer to diagram alongside.

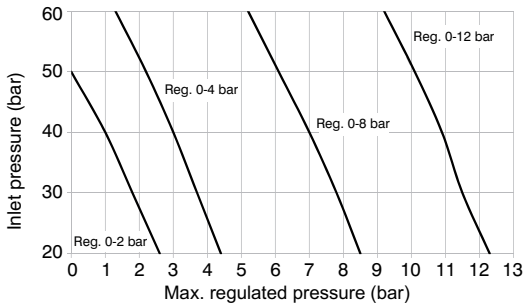

PROCESS AUTOMATION TECHNOLOGY

Filter regulators

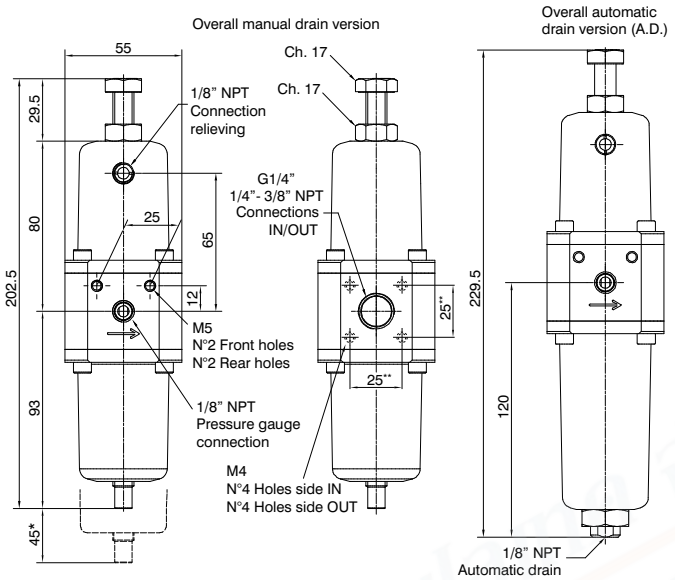

* = BOWL REMOVAL MAXIMUM HEIGHT
** = ONLY FOR M VERSION

Ordering code

SⓋ172ⒸⒺⓈⒼⓉⓄ

Ⓥ	VERSION
	S = Standard surface finishing
	F = Clean profile
	M = Modular assembly version
Ⓒ	CONNECTIONS
	A = 1/4" NPT
	B = 3/8" NPT
	C = G1/4"
Ⓢ	FILTER PORE SIZE
	A = 5 μm - 316 stainless steel
	B = 20 μm - 316 stainless steel
	C = 50 μm - 316 stainless steel
	D = 5 μm - HDPE
	E = 20 μm - HDPE
	F = 50 μm - HDPE
Ⓖ	PRESSURE RANGE
	A = 0-2 bar
	B = 0-4 bar
	C = 0-8 bar
	D = 0-12 bar
Ⓣ	TYPE
	= Standard*
	N = Without relieving
Ⓞ	OPTIONS
	= Standard*
	L = Low temperature
	Z = Low temperature (-60 °C)
	H = High temperature
	S = Automatic drain
	SR = Reduced orifice automatic drain
	EF = EPDM-FDA

* no additional letter required

Construction characteristics

- Body, adjustment mechanism, AISI 316L stainless steel and caseback intern. components
- AISI 316 stainless steel adjustment springs.
- Fixing screws, adjustment screws and locknut in A4 (AISI 316) stainless steel.
- Filter-pressure regulator diaphragm with over-pressure drain (Relieving).
- Low hysteresis rolling diaphragm.
- Balanced system.
- Manual or automatic condensed drain.

Note

The pressure must be always regulating while increasing. For a more precise regulation and higher sensibility, the use of a regulator with a pressure range as close as possible to the regulated pressure is recommended.

Technical characteristics

Maximum inlet pressure (standard version)	20 bar
Maximum inlet pressure (automatic drain version)	16 bar
Maximum inlet pressure (reduced orifice automatic drain version)	10 bar
Temperature (standard version)	-30°C ... +80°C
Temperature (low temperature version)	-50°C ... +80°C
Temperature (low temperature version -60 °C)	-60°C ... +80°C
Temperature (high temperature version)	-5°C ... +150°C
Temperature (automatic and reduced orifice drain version)	-5°C ... +70°C
Temperature (EPDM-FDA version)	-40°C ... +100°C
Pressure gauge connection	1/8" NPT
Weight	1470 (gr.)
Bowl capacity	15 cm³
Assembly positions	Vertical

Flow rate chart

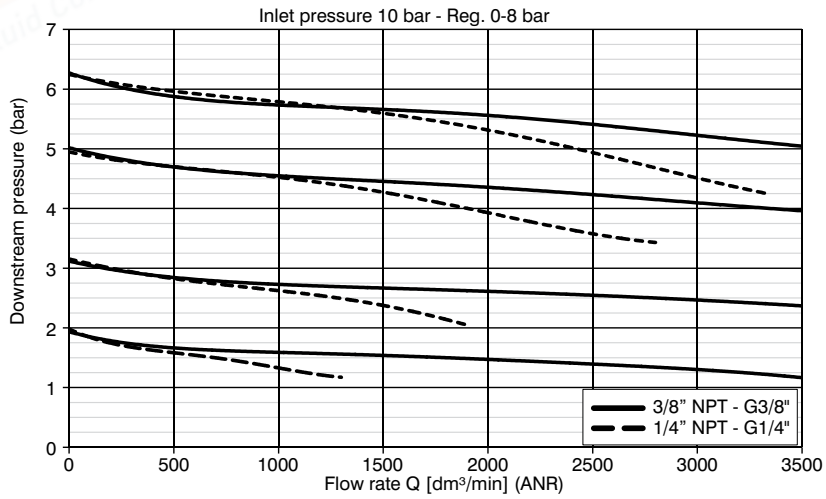

Pressure regulator Stainless steel line have been designed to withstand **a 60 bar** maximum inlet pressure.
Maximum regulated outlet pressure is 20 bar.
For performance details please refer to diagram alongside.

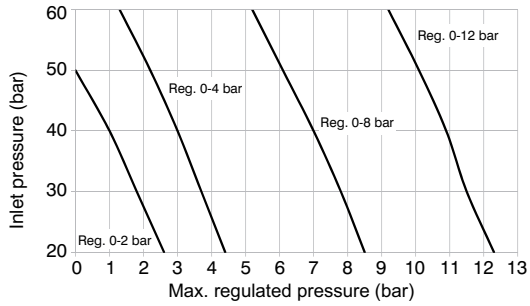

Fixing bracket

Ordering code
SS17250

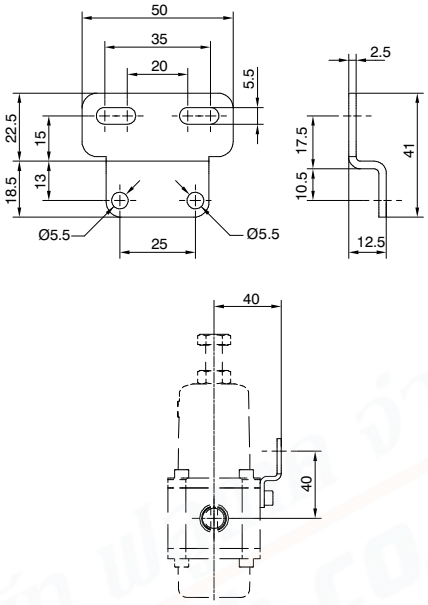

Weight 32 gr.
AISI 316L stainless steel material.
Allows wall fixing of individual products.

Pressure gauge

Ordering code	
SS17070AⓈ	
	SCALE
Ⓢ	A = 0 - 4 bar
	B = 0 - 12 bar

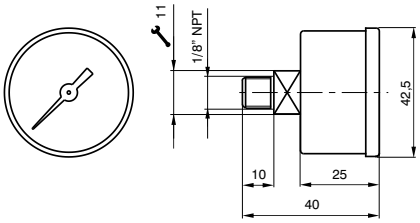

Weight 60 gr.
AISI 316 stainless steel material.
Glass transparent part with an AISI 316 stainless steel retaining ring.
Available with 0 - 4 bar and 0 - 12 bar scale.

Tamper-proof kit

Ordering code
SS17255

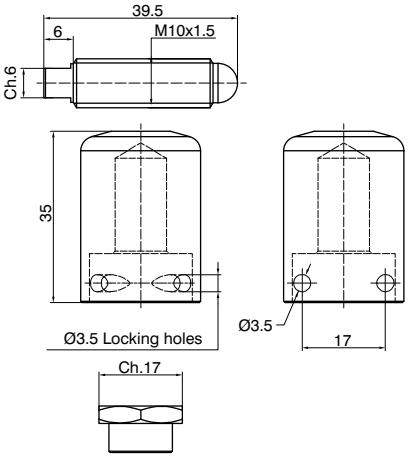

Weight 116 gr.
AISI 316L stainless steel material.
Padlockable tamper-proof kit:
Replace screw and nut with those included in the kit, insert the cover, lock with padlock or metal wire.

PROCESS AUTOMATION TECHNOLOGY

Filters

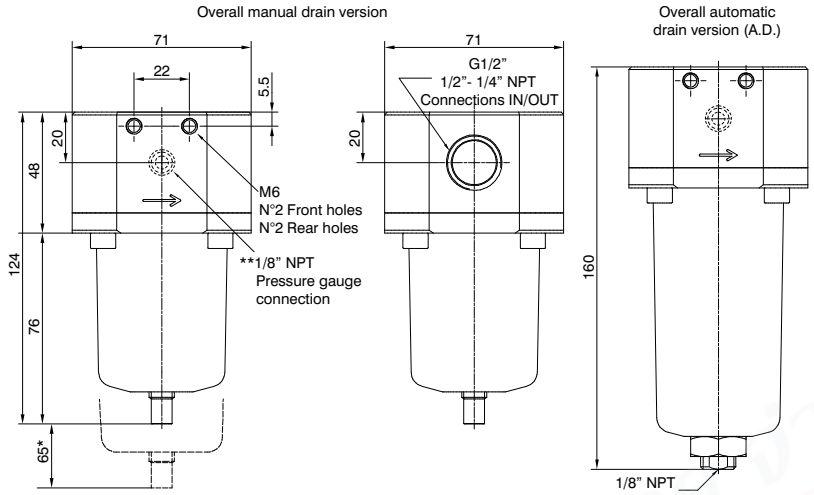

* = BOWL REMOVAL MAXIMUM HEIGHT
** = ONLY FOR VERSION WITH PRESSURE GAUGE CONNECTION

Ordering code

SⓋ173ⒸFⓈⓄⓏ

Ⓥ	VERSION
	S = Standard surface finishing
	F = Clean profile
Ⓒ	CONNECTIONS
	A = 1/4" NPT
	B = 1/2" NPT
	D = G1/2"
Ⓢ	FILTER PORE SIZE
	A = 5 μm - 316 stainless steel
	B = 20 μm - 316 stainless steel
	C = 50 μm - 316 stainless steel
	D = 5 μm - HDPE
	E = 20 μm - HDPE
	F = 50 μm - HDPE
Ⓞ	OPTIONS
	= Standard*
	L= Low temperature
	Z = Low temperature (-60 °C)
	H= High temperature
	S= Automatic drain
	SR = Reduced orifice automatic drain
	EF= EPDM-FDA
Ⓩ	ENCLOSURE OPTIONS
	= Standard*
	G = pressure gauge connection

* no additional letter required

Construction characteristics
- Body, bowl and internal components in AISI 316L stainless steel. - A4 (AISI 316) stainless steel fixing screws. - Manual or automatic condensed drain.

Technical characteristics	
Maximum inlet pressure (standard version)	20 bar
Maximum inlet pressure (automatic drain version)	16 bar
Maximum inlet pressure (reduced orifice automatic drain version)	10 bar
Temperature (standard version)	-30°C ... +80°C
Temperature (low temperature version)	-50°C ... +80°C
Temperature (low temperature version -60 °C)	-60°C ... +80°C
Temperature (high temperature version)	-5°C ... +150°C
Temperature (automatic and reduced orifice drain version)	-5°C ... +70°C
Temperature (EPDM-FDA version)	-40°C ... +100°C
Weight	1650 (gr.)
Bowl capacity	25 cm³
Assembly positions	Vertical

Flow rate chart

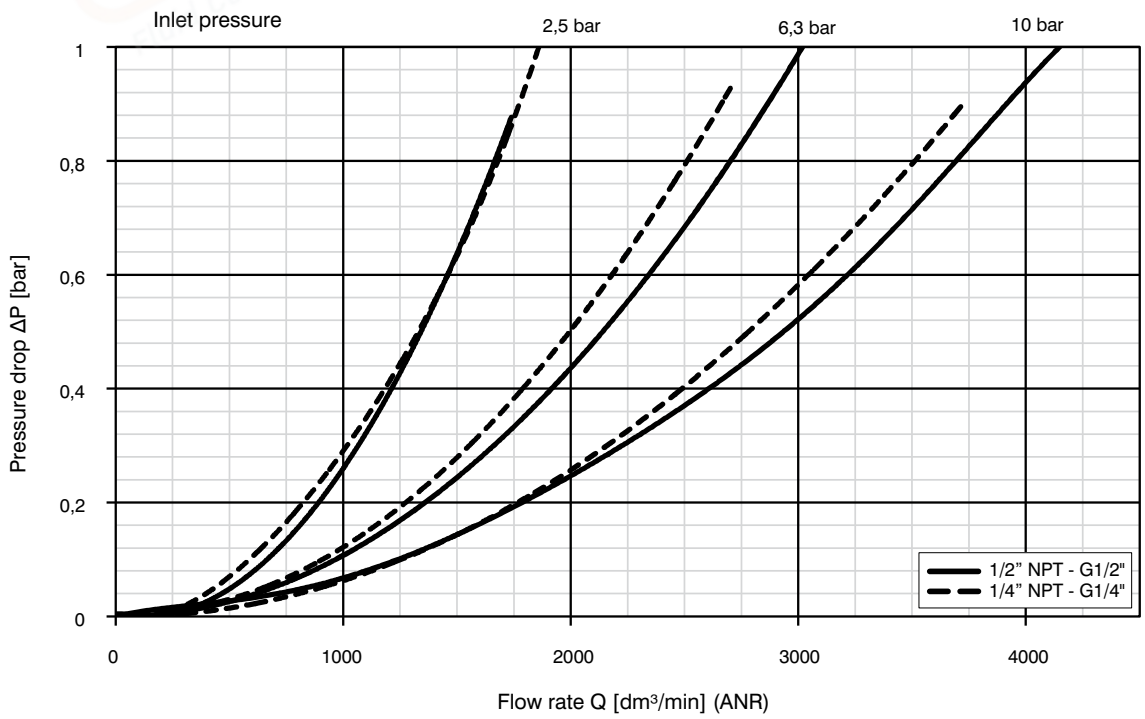

Regulators

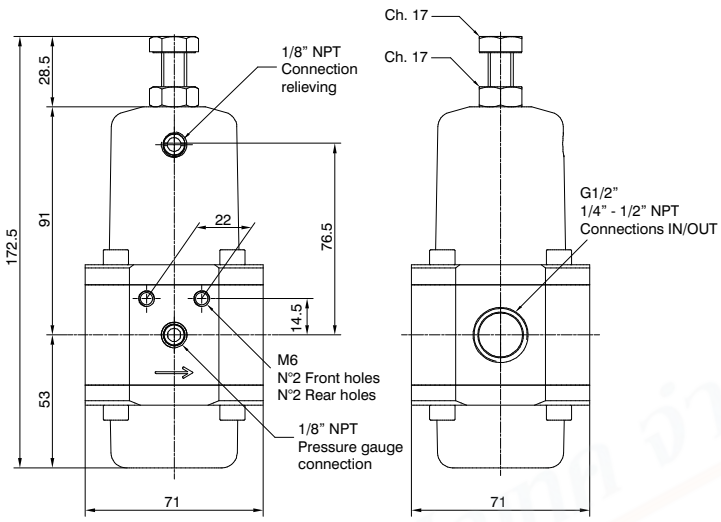

Ordering code	
S V 173 C R G T O	
V	VERSION
	S = Standard surface finishing
	F = Clean profile
C	CONNECTIONS
	A = 1/4" NPT
	B = 1/2" NPT
	D = G1/2"
G	PRESSURE RANGE
	A = 0-2 bar
	B = 0-4 bar
	C = 0-8 bar
	D = 0-12 bar
T	TYPE
	= Standard*
	N = Without relieving
O	OPTIONS
	= Standard*
	L= Low temperature
	Z = Low temperature (-60 °C)
	H= High temperature
	EF= EPDM-FDA

* no additional letter required

Construction characteristics

- Body, adjustment mechanism, AISI 316L stainless steel and caseback inter. components
- AISI 316 stainless steel adjustment springs.
- Fixing screws, adjustment screws and locknut in A4 (AISI 316) stainless steel.
- Pressure regulator diaphragm with over-pressure drain (Relieving).
- Low hysteresis rolling diaphragm.
- Balanced system.

Note

The pressure must be always regulating while increasing. For a more precise regulation and higher sensibility, the use of a regulator with a pressure range as close as possible to the regulated pressure is recommended.

Technical characteristics

Maximum inlet pressure (standard version)	20 bar
Temperature (standard version)	-30°C ... +80°C
Temperature (low temperature version)	-50°C ... +80°C
Temperature (low temperature version -60 °C)	-60°C ... +80°C
Temperature (high temperature version)	-5°C ... +150°C
Temperature (EPDM-FDA version)	-40°C ... +100°C
Pressure gauge connection	1/8" NPT
Weight	1830 (gr.)
Assembly positions	Indifferent

Flow rate chart

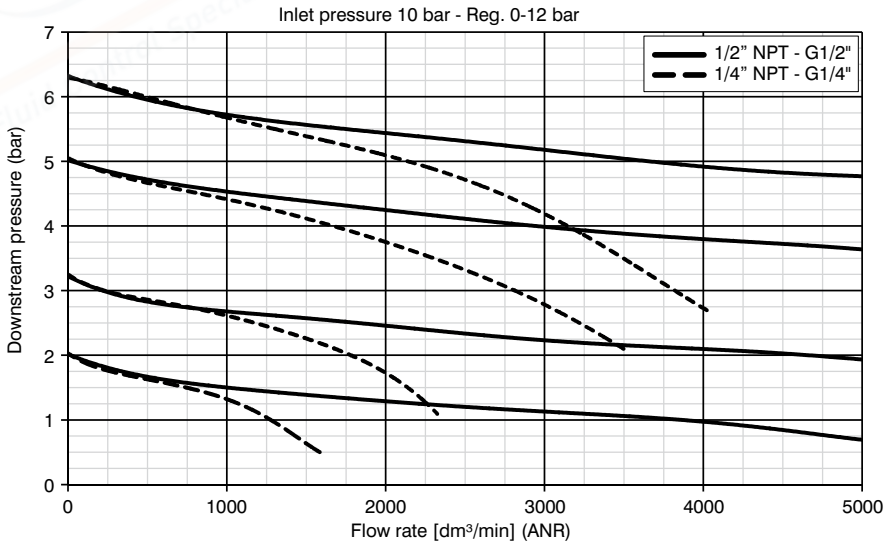

Pressure regulator Stainless steel line have been designed to withstand **a 60 bar** maximum inlet pressure.
Maximum regulated outlet pressure is 20 bar.
For performance details please refer to diagram alongside.

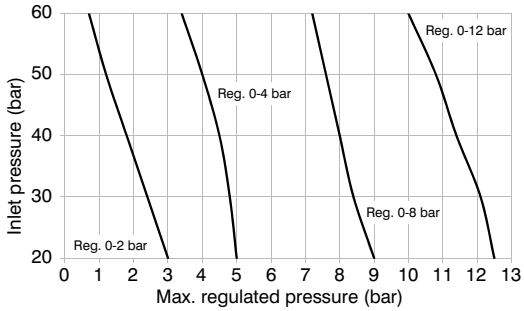

PROCESS AUTOMATION TECHNOLOGY

Filter regulators

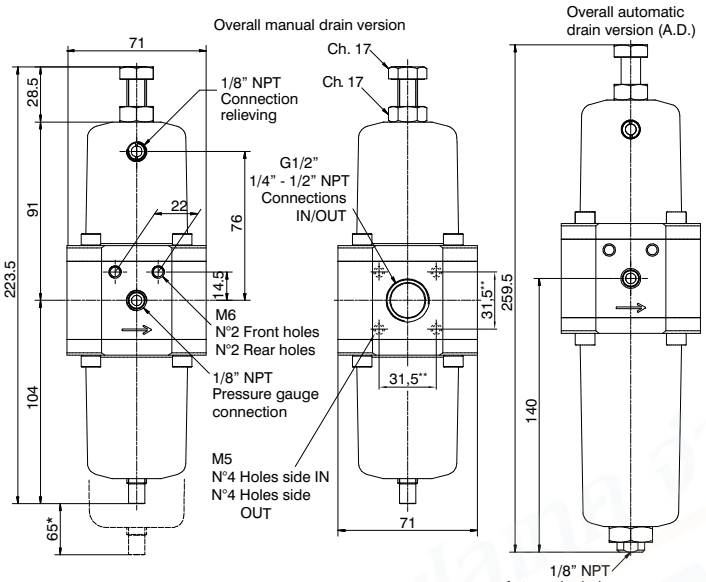

Ordering code

SⓋ173ⒸⒺⓈⒼⓉⓄ

Ⓥ	VERSION
	S = Standard surface finishing
	F = Clean profile
	M = Modular assembly version
Ⓒ	CONNECTIONS
	A = 1/4" NPT
	B = 1/2" NPT
	D = G1/2"
Ⓢ	FILTER PORE SIZE
	A = 5 μm - 316 stainless steel
	B = 20 μm - 316 stainless steel
	C = 50 μm - 316 stainless steel
	D = 5 μm - HDPE
	E = 20 μm - HDPE
	F = 50 μm - HDPE
Ⓖ	PRESSURE RANGE
	A = 0-2 bar
	B = 0-4 bar
	C = 0-8 bar
	D = 0-12 bar
Ⓣ	TYPE
	= Standard*
	N = Without relieving
Ⓞ	OPTIONS
	= Standard*
	L = Low temperature
	Z = Low temperature (-60 °C)
	H = High temperature
	S = Automatic drain
	SR = Reduced orifice automatic drain
	EF = EPDM-FDA

* no additional letter required

Construction characteristics

- Body, adjustment mechanism, AISI 316L stainless steel and caseback intern. components
- AISI 316 stainless steel adjustment springs.
- Fixing screws, adjustment screws and locknut in A4 (AISI 316) stainless steel.
- Filter-pressure regulator diaphragm with over-pressure drain (Relieving).
- Low hysteresis rolling diaphragm.
- Balanced system.
- Manual or automatic condensed drain.

Note

The pressure must be always regulating while increasing. For a more precise regulation and higher sensibility, the use of a regulator with a pressure range as close as possible to the regulated pressure is recommended.

Technical characteristics

Maximum inlet pressure (standard version)	20 bar
Maximum inlet pressure (automatic drain version)	16 bar
Maximum inlet pressure (reduced orifice automatic drain version)	10 bar
Temperature (standard version)	-30°C ... +80°C
Temperature (low temperature version)	-50°C ... +80°C
Temperature (low temperature version -60 °C)	-60°C ... +80°C
Temperature (high temperature version)	-5°C ... +150°C
Temperature (automatic and reduced orifice drain version)	-5°C ... +70°C
Temperature (EPDM-FDA version)	-40°C ... +100°C
Pressure gauge connection	1/8" NPT
Weight	2110 (gr.)
Bowl capacity	25 cm³
Assembly positions	Vertical

Flow rate chart

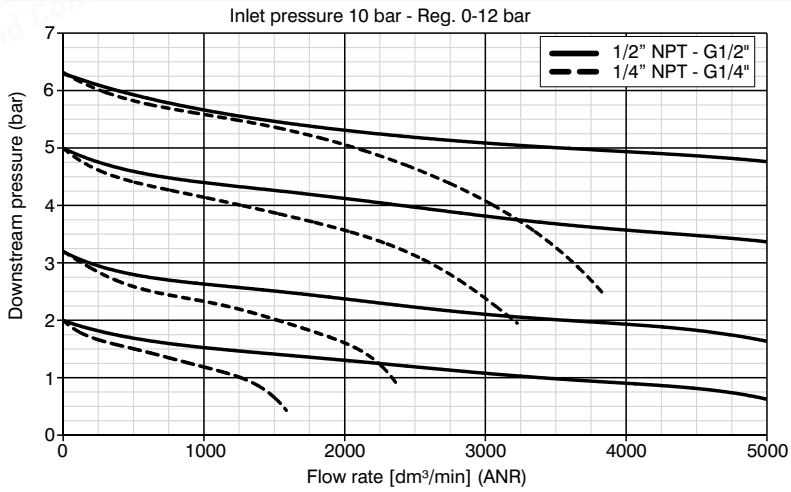

Pressure regulator Stainless steel line have been designed to withstand **a 60 bar** maximum inlet pressure.
Maximum regulated outlet pressure is 20 bar.
For performance details please refer to diagram alongside.

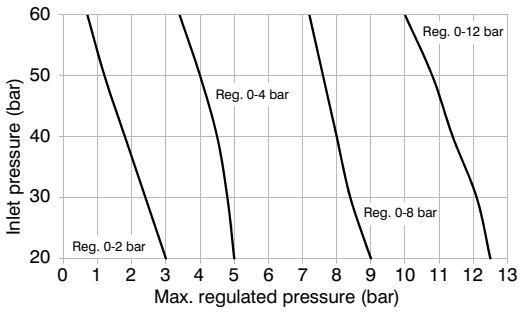

Fixing bracket

Ordering code
SS17350

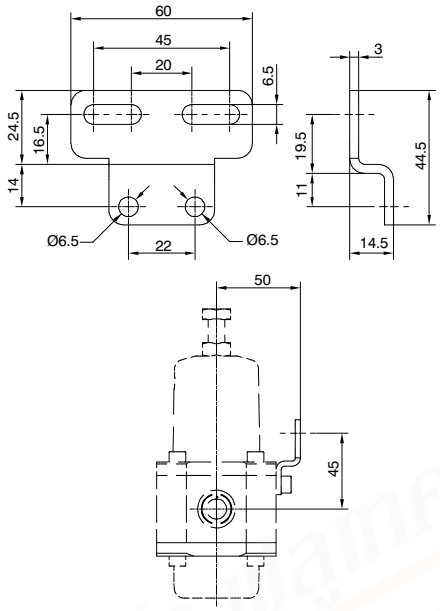

Weight 32 gr.
AISI 316L stainless steel material.
Allows wall fixing of individual products.

Pressure gauge

Ordering code	
SS17070A(S)	
	SCALE
(S)	A = 0 - 4 bar
	B = 0 - 12 bar

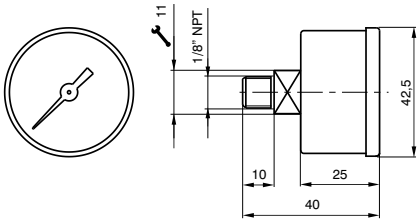

Weight 60 gr.
AISI 316 stainless steel material.
Glass transparent part with an AISI 316 stainless steel retaining ring.
Available with 0 - 4 bar and 0 - 12 bar scale.

Tamper-proof kit

Ordering code
SS17255

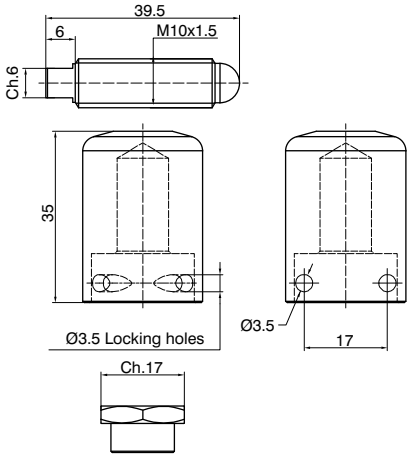

Weight 116 gr.
AISI 316L stainless steel material.
Padlockable tamper-proof kit:
Replace screw and nut with those included in the kit, insert the cover, lock with padlock or metal wire.

บริษัท ฟลูเทค จำกัด
Flu-tech co.,ltd

PROCESS AUTOMATION TECHNOLOGY

Filters

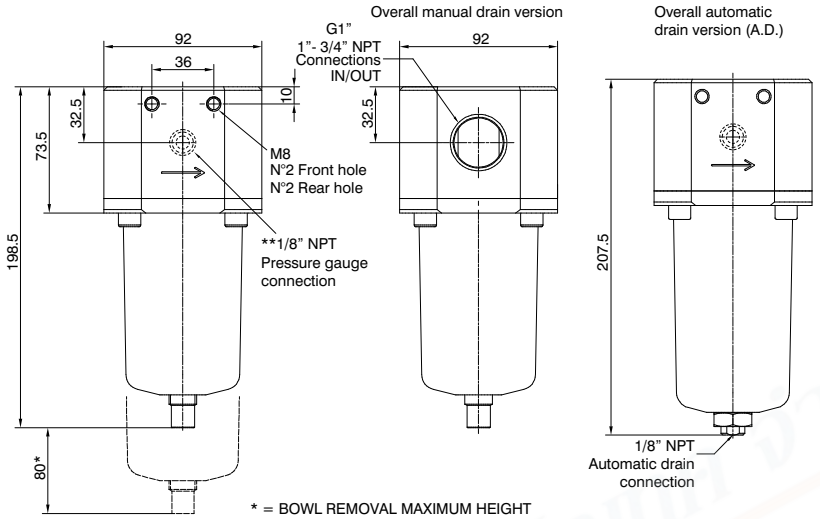

* = BOWL REMOVAL MAXIMUM HEIGHT
** = ONLY FOR VERSION WITH PRESSURE GAUGE CONNECTION

Ordering code

S V 174 C F S O Z

V	VERSION
	S = Standard surface finishing
	F = Clean profile
C	CONNECTIONS
	A = 3/4" NPT
	B = 1" NPT
	D = G1"
S	FILTER PORE SIZE
	A = 5 µm - 316 stainless steel
	B = 20 µm - 316 stainless steel
	C = 50 µm - 316 stainless steel
	D = 5 µm - HDPE
	E = 20 µm - HDPE
	F = 50 µm - HDPE
O	OPTIONS
	= Standard*
	L= Low temperature
	Z = Low temperature (-60 °C)
	H= High temperature
	S= Automatic drain
	SR = Reduced orifice automatic drain
	EF= EPDM-FDA
Z	ENCLOSURE OPTIONS
	= Standard*
	G = pressure gauge connection

* no additional letter required

Construction characteristics
- Body, bowl and internal components in AISI 316L stainless steel. - A4 (AISI 316) stainless steel fixing screws. - Manual or automatic condensed drain.

Technical characteristics	
Maximum inlet pressure (standard version)	20 bar
Maximum inlet pressure (automatic drain version)	16 bar
Maximum inlet pressure (reduced orifice automatic drain version)	10 bar
Temperature (standard version)	-30°C ... +80°C
Temperature (low temperature version)	-50°C ... +80°C
Temperature (low temperature version -60 °C)	-60°C ... +80°C
Temperature (high temperature version)	-5°C ... +150°C
Temperature (automatic and reduced orifice drain version)	-5°C ... +70°C
Temperature (EPDM-FDA version)	-40°C ... +100°C
Weight 3/4" NPT - G 3/4"	4700 (gr.)
Weight 1" NPT - G 1"	4600 (gr.)
Bowl capacity	78 cm³
Assembly positions	Vertical

Flow rate chart

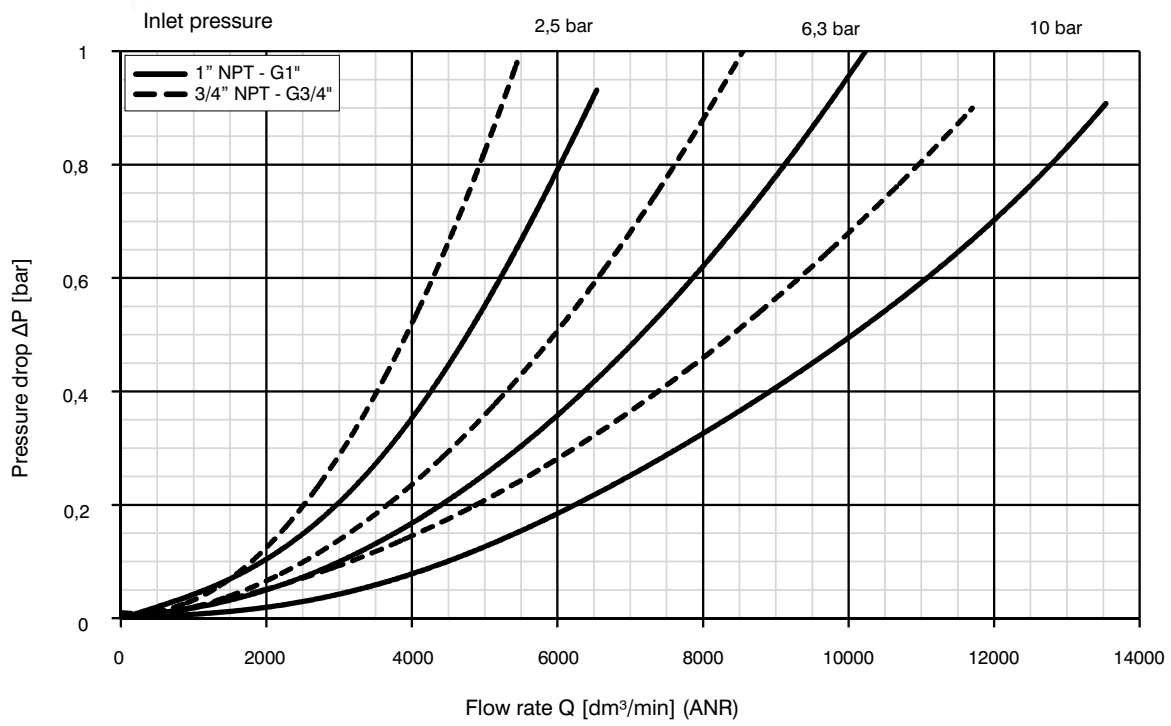

Regulators

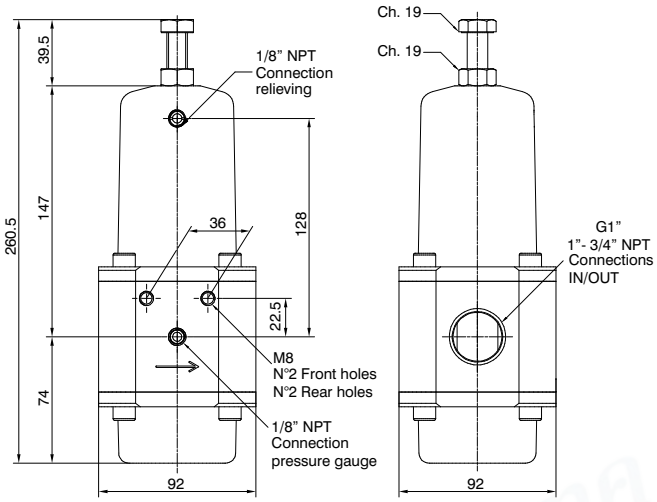

Ordering code	
S V 174 C R G T O	
V	VERSION
	S = Standard surface finishing
	F = Clean profile
C	CONNECTIONS
	A = 3/4" NPT
	B = 1" NPT
	D = G1"
G	PRESSURE RANGE
	A = 0-2 bar
	B = 0-4 bar
	C = 0-7 bar
	D = 0-10 bar
T	TYPE
	= Standard*
	N = Without relieving
O	OPTIONS
	= Standard*
	L= Low temperature
	Z = Low temperature (-60 °C)
	H= High temperature
	EF= EPDM-FDA
* no additional letter required	

Construction characteristics
- Body, adjustment mechanism, AISI 316L stainless steel and caseback inter. components - AISI 316 stainless steel adjustment springs. - Fixing screws, adjustment screws and locknut in A4 (AISI 316) stainless steel. - Pressure regulator diaphragm with over-pressure drain (Relieving). - Low hysteresis rolling diaphragm. - Balanced system.

Note
The pressure must be always regulating while increasing. For a more precise regulation and higher sensibility, the use of a regulator with a pressure range as close as possible to the regulated pressure is recommended.

Technical characteristics	
Maximum inlet pressure (standard version)	20 bar
Temperature (standard version)	-30°C ... +80°C
Temperature (low temperature version)	-50°C ... +80°C
Temperature (low temperature version -60 °C)	-60°C ... +80°C
Temperature (high temperature version)	-5°C ... +150°C
Temperature (EPDM-FDA version)	-40°C ... +100°C
Pressure gauge connection	1/8" NPT
Weight 3/4" NPT - G 3/4"	5500 (gr.)
Weight 1" NPT - G 1"	5400 (gr.)
Assembly positions	Indifferent

Flow rate chart

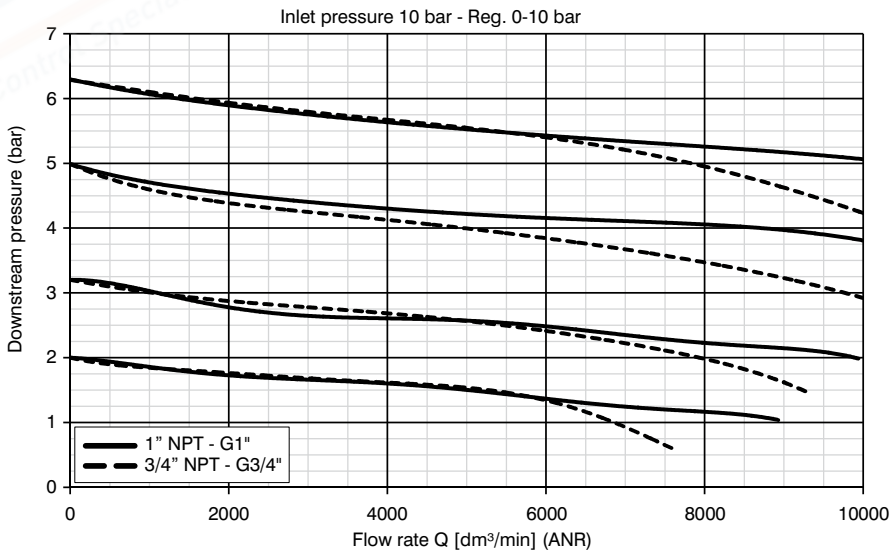

Pressure regulator Stainless steel line have been designed to withstand **a 60 bar** maximum inlet pressure.
Maximum regulated outlet pressure is 20 bar.
For performance details please refer to diagram alongside.

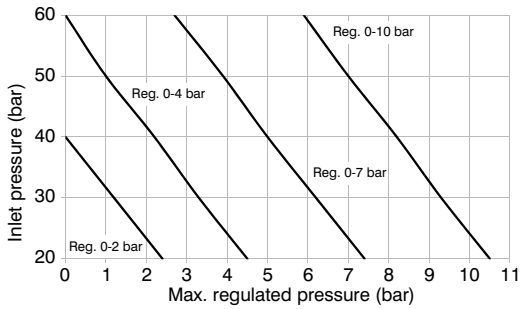

PROCESS AUTOMATION TECHNOLOGY

Filter regulators

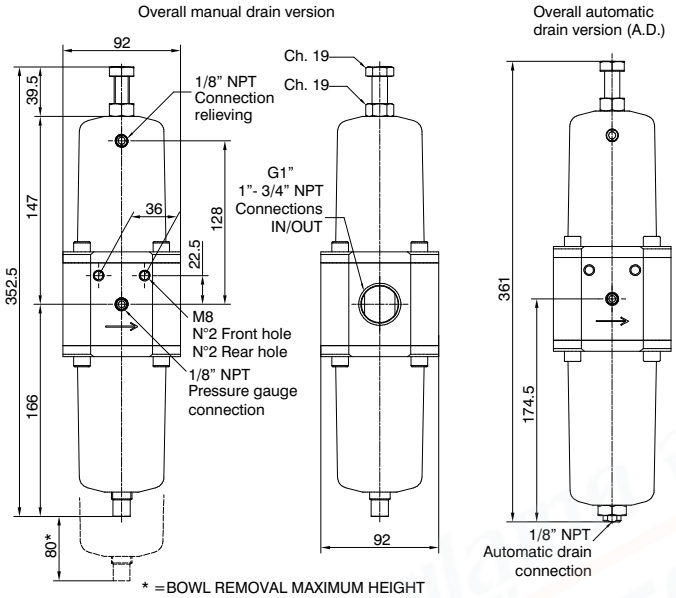

Ordering code

SⓋ174ⒸⒺⓈⒼⓉⓄ

Ⓥ	VERSION
	S = Standard surface finishing
	F = Clean profile
Ⓒ	CONNECTIONS
	A = 3/4" NPT
	B = 1" NPT
	D = G1"
Ⓢ	FILTER PORE SIZE
	A = 5 μm - 316 stainless steel
	B = 20 μm - 316 stainless steel
	C = 50 μm - 316 stainless steel
	D = 5 μm - HDPE
	E = 20 μm - HDPE
	F = 50 μm - HDPE
Ⓖ	PRESSURE RANGE
	A = 0-2 bar
	B = 0-4 bar
	C = 0-7 bar
	D = 0-10 bar
Ⓣ	TYPE
	= Standard*
	N = Without relieving
Ⓞ	OPTIONS
	= Standard*
	L= Low temperature
	Z = Low temperature (-60 °C)
	H= High temperature
	S= Automatic drain
	SR = Reduced orifice automatic drain
	EF= EPDM-FDA

* no additional letter required

Construction characteristics

- Body, adjustment mechanism, AISI 316L stainless steel and caseback intern. components
- AISI 316 stainless steel adjustment springs.
- Fixing screws, adjustment screws and locknut in A4 (AISI 316) stainless steel.
- Filter-pressure regulator diaphragm with over-pressure drain (Relieving).
- Low hysteresis rolling diaphragm.
- Balanced system.
- Manual or automatic condensed drain.

Note

The pressure must be always regulating while increasing. For a more precise regulation and higher sensibility, the use of a regulator with a pressure range as close as possible to the regulated pressure is recommended.

Technical characteristics

Maximum inlet pressure (standard version)	20 bar
Maximum inlet pressure (automatic drain version)	16 bar
Maximum inlet pressure (reduced orifice automatic drain version)	10 bar
Temperature (standard version)	-30°C ... +80°C
Temperature (low temperature version)	-50°C ... +80°C
Temperature (low temperature version -60 °C)	-60°C ... +80°C
Temperature (high temperature version)	-5°C ... +150°C
Temperature (automatic and reduced orifice drain version)	-5°C ... +70°C
Temperature (EPDM-FDA version)	-40°C ... +100°C
Pressure gauge connection	1/8" NPT
Weight 3/4" NPT - G 3/4"	6300 (gr.)
Weight 1" NPT - G 1"	6200 (gr.)
Bowl capacity	78 cm³
Assembly positions	Vertical

Flow rate chart

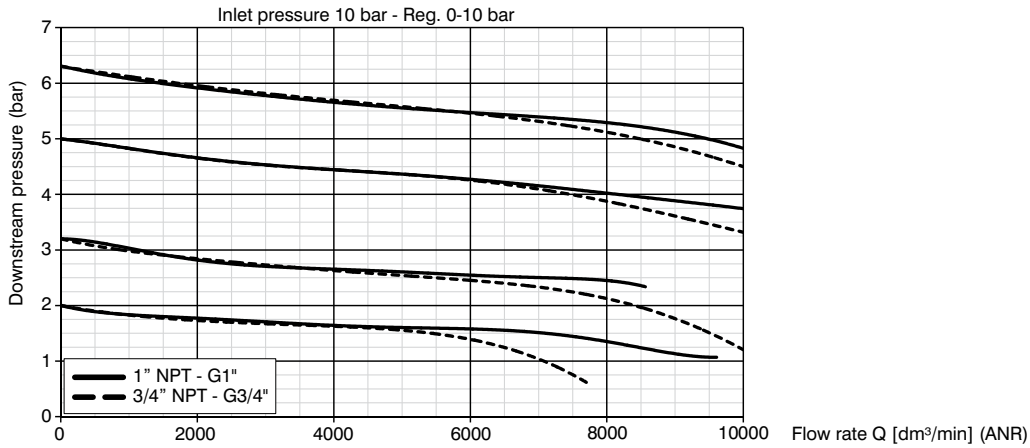

Pressure regulator Stainless steel line have been designed to withstand **a 60 bar** maximum inlet pressure.
Maximum regulated outlet pressure is 20 bar.
For performance details please refer to diagram alongside.

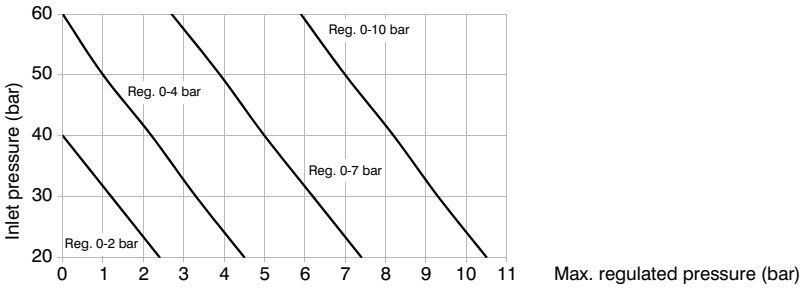

Fixing bracket

Ordering code
SS17450

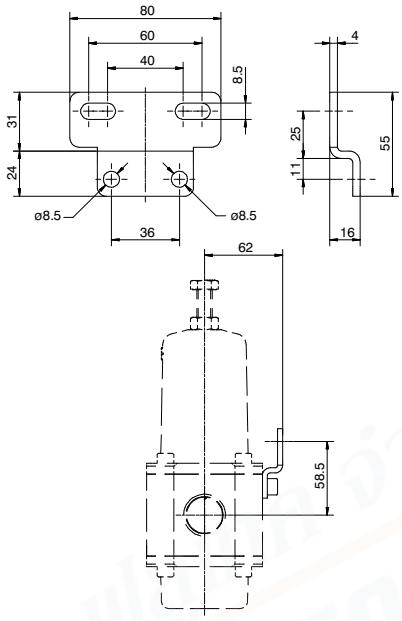

Weight 32 gr.
AISI 316L stainless steel material.
Allows wall fixing of individual products.

Pressure gauge

Ordering code	
SS17070AⓈ	
	SCALE
Ⓢ	A = 0 - 4 bar
	B = 0 - 12 bar

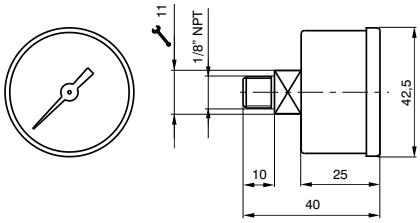

Weight 60 gr.
AISI 316 stainless steel material.
Glass transparent part with an AISI 316 stainless steel retaining ring.
Available with 0 - 4 bar and 0 - 12 bar scale.

Tamper-proof kit

Ordering code
SS17455

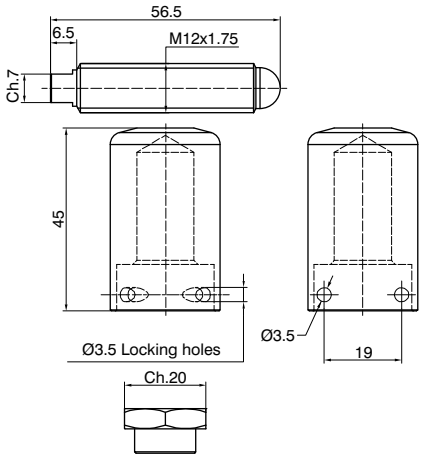

Weight 185 gr.
AISI 316L stainless steel material.
Padlockable tamper-proof kit:
Replace screw and nut with those included in the kit, insert the cover, lock with padlock or metal wire.

Volume booster series Flowplus

General

Pneumax high flow capacity air volume booster - stainless steel SS and aluminium SA series - has been engineered and developed to specifically approach the Oil & Gas industry and more widely for all the severe service applications that require excellent performances due to chemical and/or harsh environmental conditions.
Moreover, **Pneumax** booster represent performing and reliable choice in case of high flow exhaust ratio, for the whole process and industrial automation applications in general.
Both stainless steel and aluminum versions are corrosion and wear resistant, due to the same stainless steel trim type selection, with a wide range of sealing materials for extended operating temperature applications (to extreme low temperature up to high temperature application).
Pneumax volume booster is 1:1 signal to output relay, capable to provide fast response, delivering high air volume for fast actuator movement and increased stroking speed for both control and on/off valves actuators.
As a standard, an adjustable integrated by-pass valve device is available, to reduce or avoid (thru fully closed position in case of on-off application) excessive actuator overshoot or over-damping.
In addition, in order to precisely adjust actuator travel speed, **Pneumax** booster can be equipped with integral flow regulators for air delivery and exhaust.

Operating principle

The device is pneumatic operated thru inlet port. When a pressure signal from 2,5 to 8 bar is applied to the pilot port **P**, the main valve assembly opens the loading shutter **D** to allow the passage of a high volumetric flow from the inlet port to the outlet port. When the system detects that the outlet pressure is equal to the pilot signal pressure, and consequently the forces acting on the membranes **A** and **B** are equivalent, the main valve moves to the de-energized position, i.e. with the shutters **D** and **E** closed.
This condition is maintained until there is a change in signal pressure or a change in outlet pressure value. If the outlet pressure figure is higher than the pilot signal pressure, the main valve group opens the shutter of drain **E** to exhaust. If the system detects an outlet pressure lower than the pilot signal, the main valve opens to restore the outlet at correct pressure.
The signal input and output ports are connected by an integrated and adjustable by-pass valve **C**.
The adjustment, in addition to control the sensitivity of the system to changes in the pilot signal, ensures the exact equalization between the input signal and the supply occurs output.
This allows that low volume signal provide a output high volume with a signal to output pressure ratio of 1: 1.

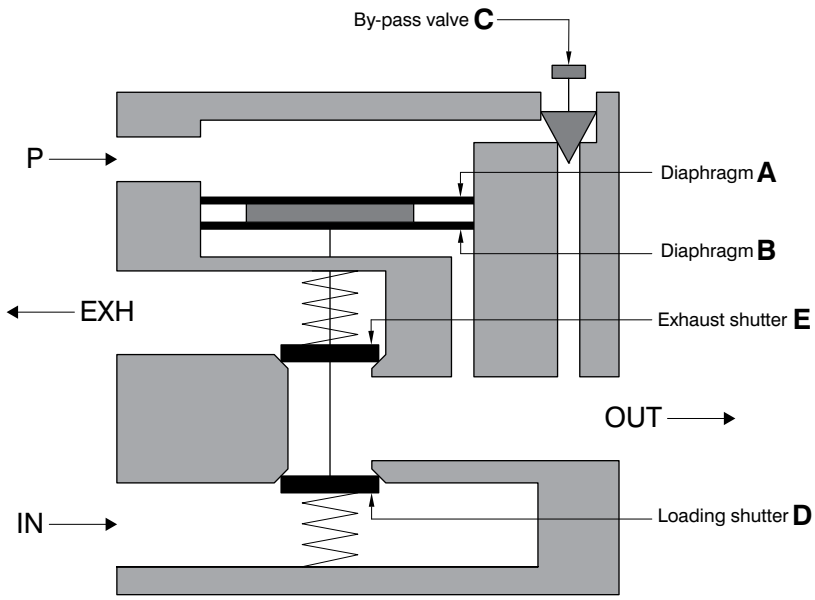

Volume booster

- Available in 2 sizes with connections from 1/4” NPT to 1” NPT
- Available in aluminium with epoxy coating paint or in stainless steel AISI 316L
- Stainless steel AISI 316L versions according to NACE MR0175 - ISO15156/1
- Compact and linear design
- Robust and reliable construction
- Double hysteresis rolling membrane system
- High stability and repeatability
- High flow rate performances
- Wide temperature range application
- 1:1 ratio between pilot pressure and outlet pressure
- Integrated by-pass valve for reliable adjustment of the system sensitivity
- Uni and bi-directional flow regulators available
- Atex certification II 2GD, SIL3 and CU-TR 012

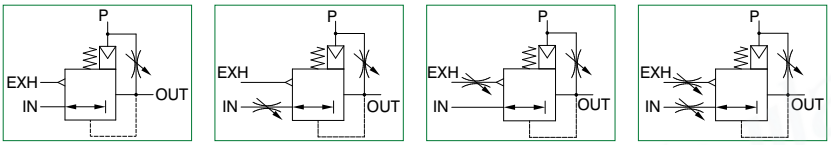

Technical characteristics

Size	Size 3	Size 4
Version	Aluminium with epoxy coating paint Stainless steel AISI 316L	
IN / OUT / EXH connections	1/4” NPT - 1/2” NPT	3/4” NPT - 1” NPT
Pilot connection	1/4” NPT	
Assembly configuration	Stand alone With fixing bracket	
Assembly positions	Indifferent	

Operational characteristics

Size	Size 3	Size 4
Fluid	Dry and clean air Inert gas Natural gas	
Maximum working pressure	13 bar	
Minimum working pressure	2,5 bar	
Maximum signal pressure	8 bar	
Minimum signal pressure	2,5 bar	
Working temperature and seals	-30°C ... +80°C - NBR seals (**Standard** version) -50°C ... +80°C - NBR LT seals (**L** version) -60°C ... +80°C - PUR - SILICONE seals (**Z** version) -5°C ... +150°C - FPM - HNBR seals (**H** version) -40°C ... +100°C - EPDM-FDA seals (**EF** version)	
Signal pressure / outlet pressure ratio	1:1 ± 5%	

Flow capacity Cv table

Size	Size 3		Size 4	
Connection	**1/4” NPT**	**1/2” NPT**	**3/4” NPT**	**1” NPT**
Output	2,5	4,2	7	9,4
Exhaust	2,5	4,2	7	9,4

Weights

Size	Size 3		Size 4	
Connection	**1/4” NPT**	**1/2” NPT**	**3/4” NPT**	**1” NPT**
Aluminium version without flow regulators	2040 g	2010 g	4470 g	4380 g
Aluminium version with uni-directional flow control regulator	2098 g	2070 g	4478 g	4394 g
Aluminium version with bi-directional flow control regulators	2122 g	2094 g	4515 g	4433 g
Stainless steel AISI 316L version without flow regulators	5460 g	5344 g	11532 g	11308 g
Stainless steel AISI 316L with uni-directional flow control regulator	5476 g	5360 g	11560 g	11336 g
Stainless steel AISI 316L with bi-directional flow control regulators	5491 g	5375 g	11574 g	11350 g

Materials

Pneumax volume booster is manufactured in two versions, one aluminum epoxy painted and one in AISI 316L stainless steel, both highly resistant to corrosion and wear.
Nuts, screws, pins and adjusting pins, as well as all the internal parts in contact with the fluid are made of AISI 316L stainless steel.

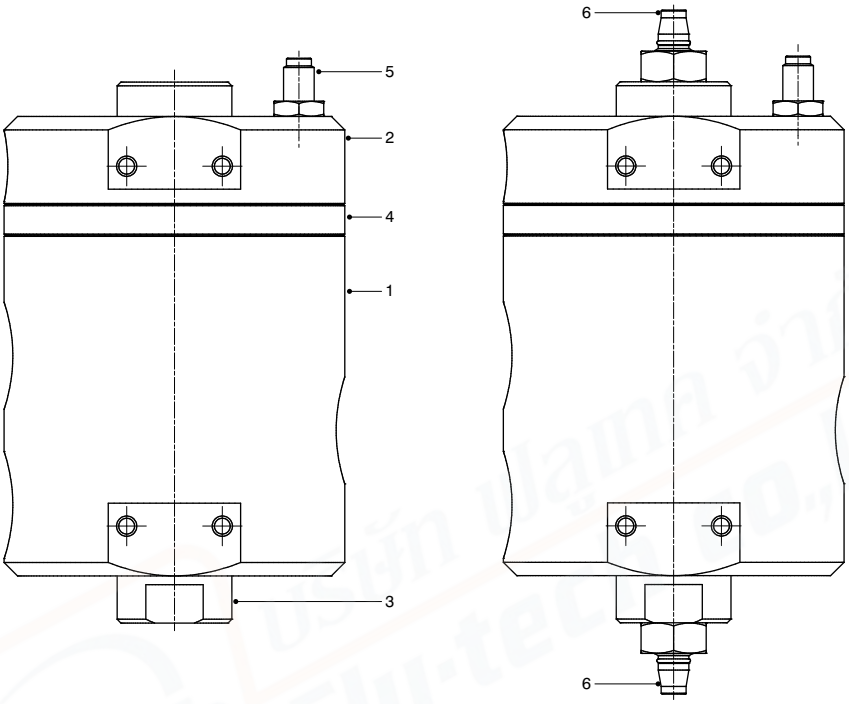

Volume booster		
1	Body	Aluminium with epoxy coating paint Stainless steel AISI 316L
2	Piloting operator	Aluminium with epoxy coating paint Stainless steel AISI 316L
3	Rear end cap	Aluminium with epoxy coating paint Stainless steel AISI 316L
4	Intermediate body	Aluminium with epoxy coating paint Stainless steel AISI 316L
5	By-pass valve	Stainless steel AISI 316L
6	Adjusting pins	Stainless steel AISI 316L
7	Springs	Stainless steel AISI 316L
8	Fixing screws and nuts	Stainless steel A4-70
9	Diaphragm and seals	NBR NBR-LT HNBR FPM SILICONE

Design

Pneumax volume booster is equipped with a by-pass valve as standard, and can be supplied with no flow regulator device or complete with uni-directional or bi-directional flow regulators.

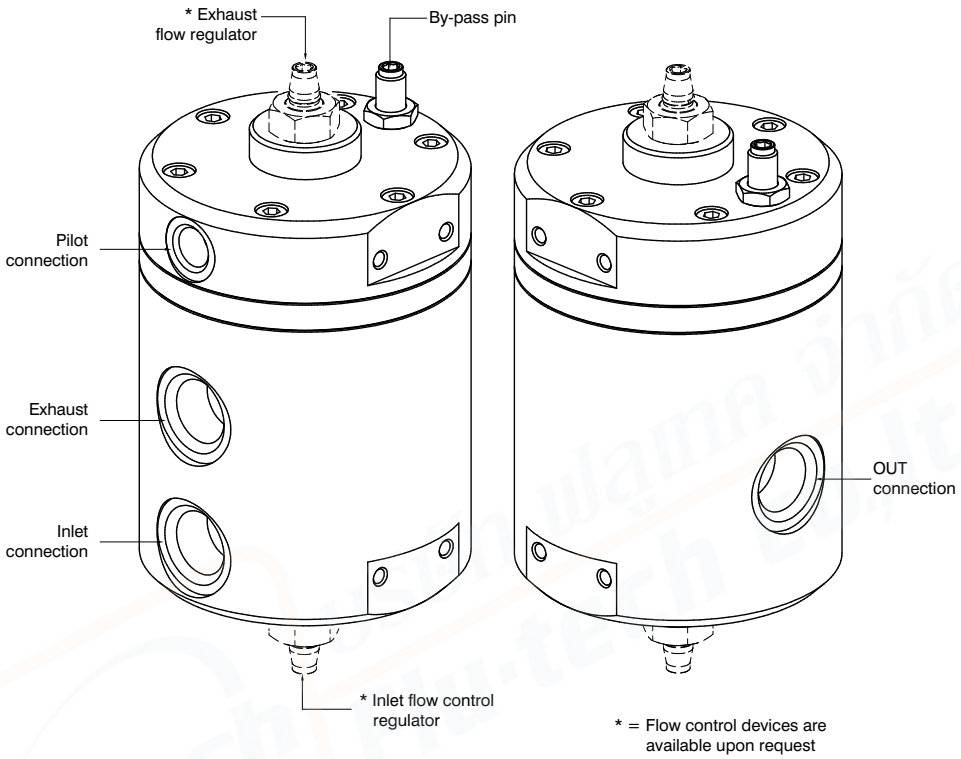

Order codes

SA 17 3B VB R2 L

Version
SA : Aluminium with epoxy coating paint
SS : Stainless steel AISI 316L

Size and connections
3A : Size 3 - 1/4” NPT
3B : Size 3 - 1/2” NPT
4A : Size 4 - 3/4” NPT
4B : Size 4 - 1” NPT

Flow regulators options
: without flow regulators
RS : with exhaust flow regulator
RM : with inlet flow control regulator
R2 : with bi-directional flow control regulators

Temperature options
: Standard (-30°C ... +80°C)
L : Low temperature (-50°C ... +80°C)
Z : Low temperature (-60°C ... +80°C)
H : High temperature (-5°C ... +150°C)
EF : EPDM-FDA (-40°C ... +100°C)

Example : SA173BVBR2L : Size 3 Volume booster, 1/2” NPT, with bi-directional flow control regulators, low temperature

PROCESS AUTOMATION TECHNOLOGY

Flow charts

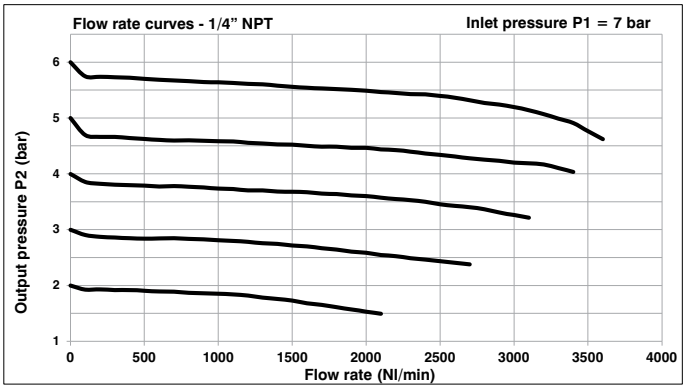

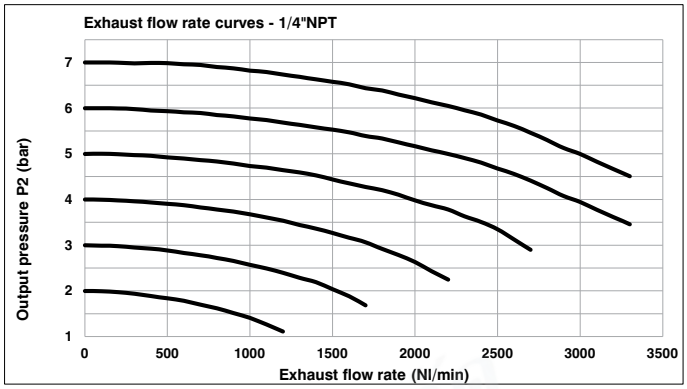

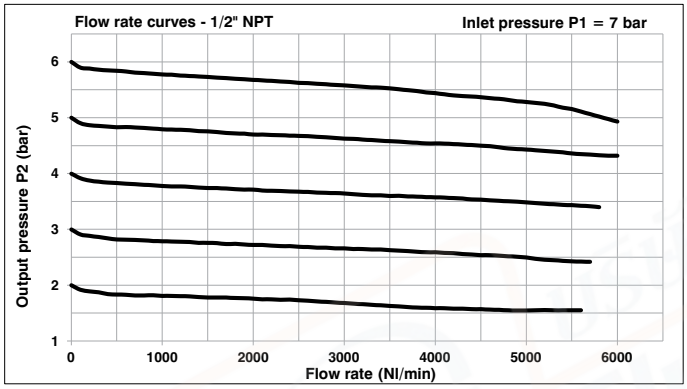

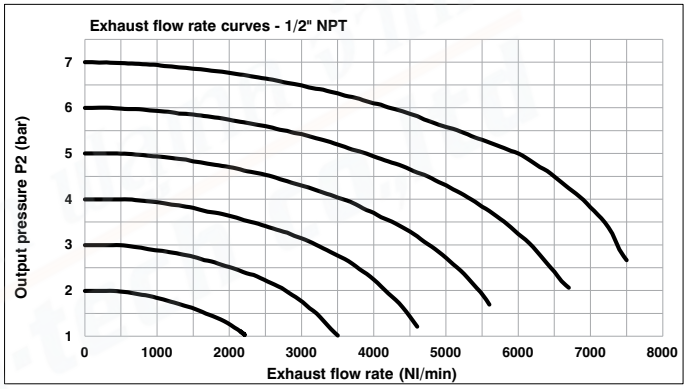

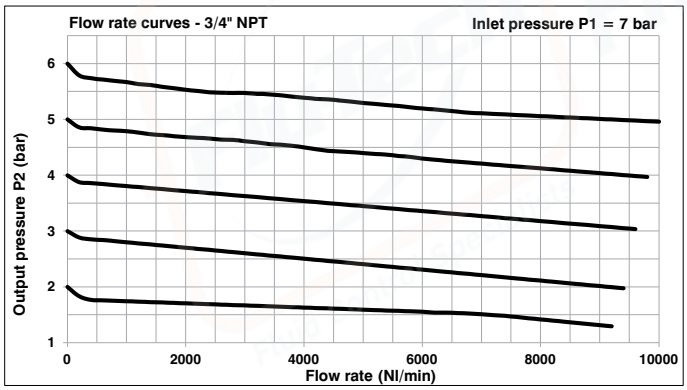

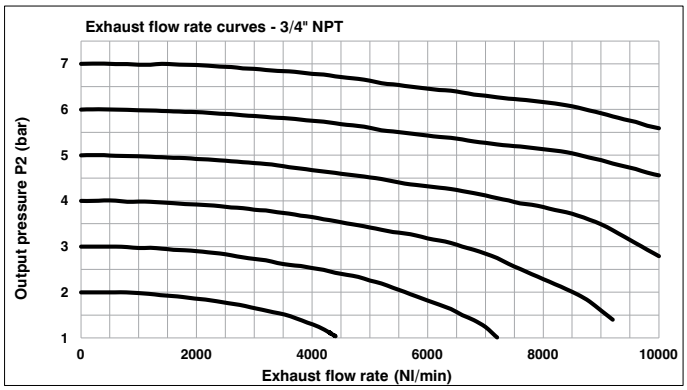

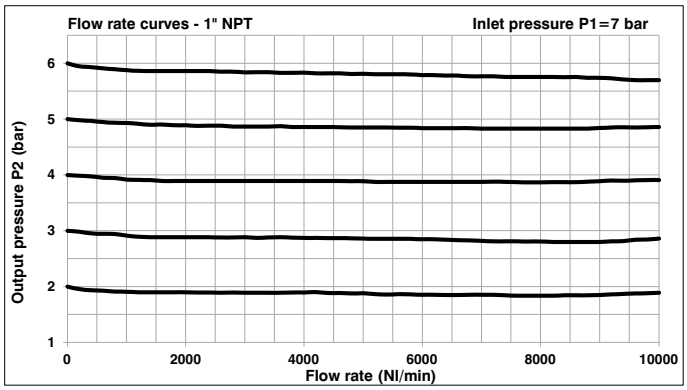

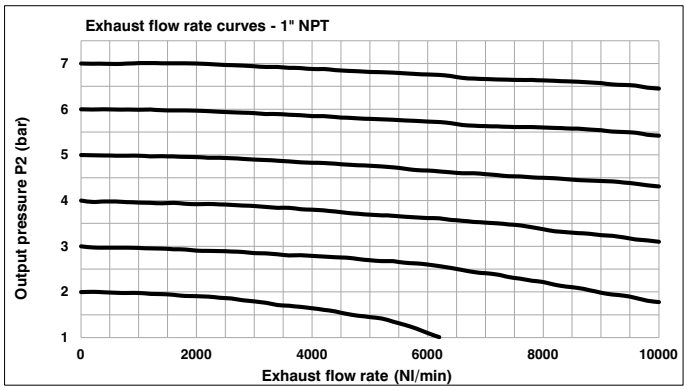

Dimensions

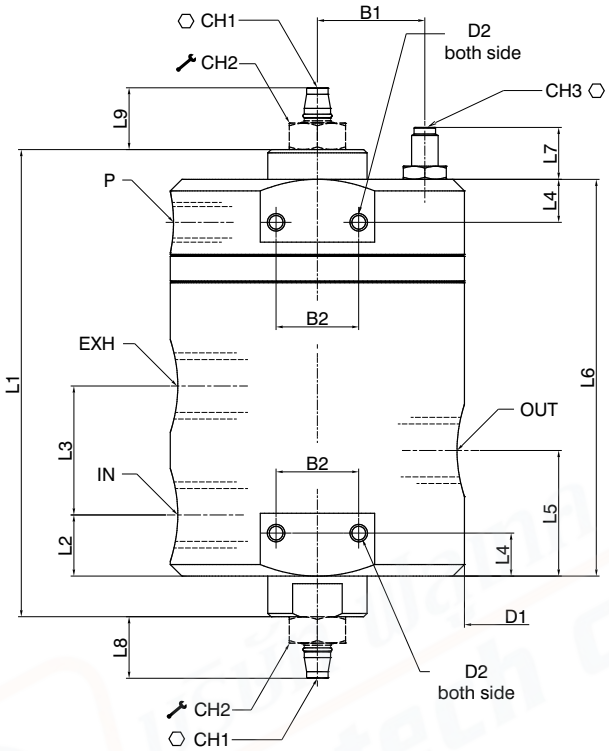

Model	B1	B2	D1	D2 (both side)	L1	L2	L3	L4	L5	L6	L7	L8	L9	IN - OUT - EXH	P	CH1	CH2	CH3
SA173...	32,5	25	89	M5	141,5	18,5	39	13	38	120	15,5	/	/	1/4" NPT 1/2" NPT	1/4" NPT	ES.4	17	ES.4
SS173...	33,5																	
SA173...R#	32,5											19	19					
SS173...R#	33,5																	
SA174...	41	22	109	M6	205	27,5	63,5	14	59,5	175	15,5	/	/	3/4" NPT 1" NPT			19	
SS174...	43																	
SA174...R#	41											24,5	26,5					
SS174...R#	43																	

Accessories and fixing

Special fixing brackets made of AISI 316L stainless steel are provided upon request.
Fixing position for every need is confirmed by using one or two brackets.

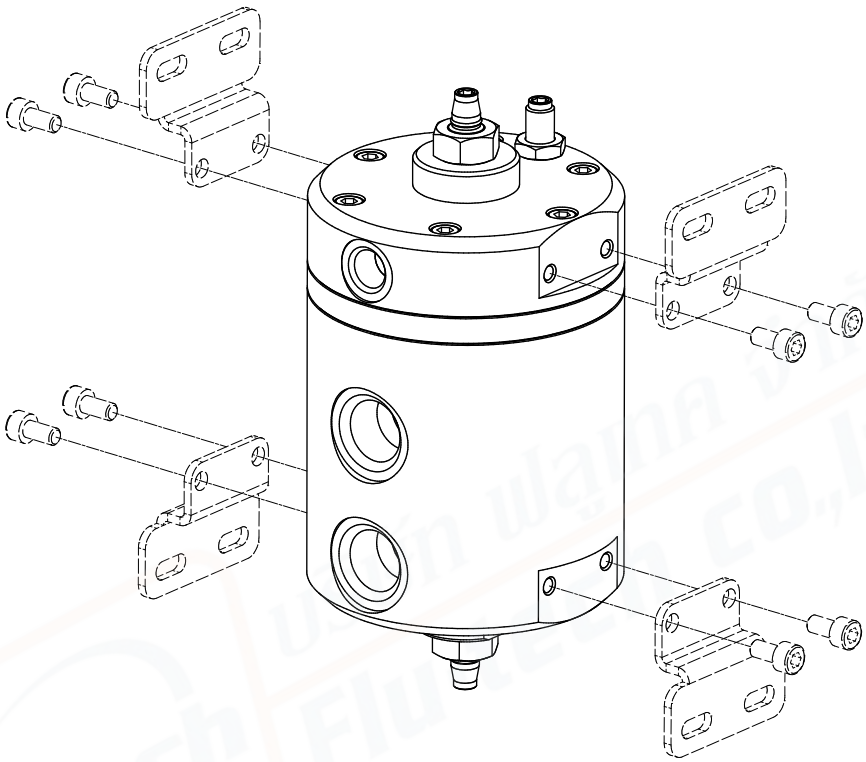

Fixing bracket

SS17250

Model
SS17250 : applicable to model SS173... and SA173...
SS17350 : applicable to model SS174... and SA174...

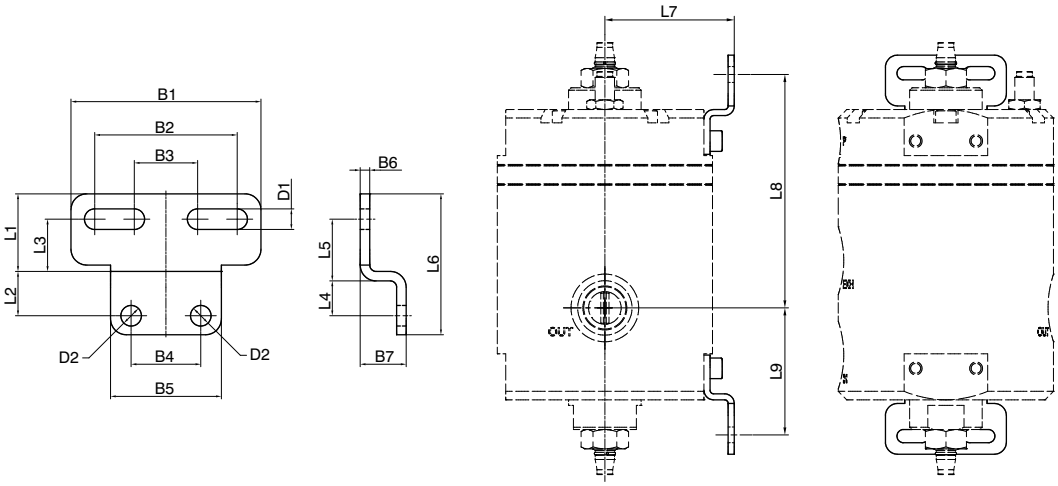

Model	L1	L2	L3	L4	L5	L6	L7	L8	L9	B1	B2	B3	B4	B5	B6	B7	D1	D2	Weight (g)
SS17250	22,5	13	15	10,5	17,5	41	53,5	96,5	52,5	50	35	20	25	34	2,5	12,5	5,5	5,5	39
SS17350	24,5	14	16,5	11	19,5	44,5	65,5	132	76	60	45	20	22	35	3	14,5	6,5	6,5	57

Valves 1/4” NPT series Steel line

Pneumax has wide experience and know-how to develop application-oriented solutions for the process industry, as well as a range of highperformance products aimed to improve the effciency, productivity and quality of the process itself.
Each item passed thru internal long-ride severe test procedure and after validated through years of experience.
All certifications and relevant approvals are available.
Thanks to a global presence worldwide **Pneumax** can provide prompt assistance to any customer’s specific needs. Our complete product range includes large number of products for day-by-day business.
At Pneumax the focus is always on customer satisfaction.

General
Stainless steel brand series have been engineered and developed to meet process automation and Oil & Gas severe service requirements, where material performances, product reliability and health and safety issues are critical elements. As a result, Pneumax products are perfectly suitable to work with sweet gas media and corrosive / aggressive gases.

Applications for actuation:
- ESDV – emergency shut-down valve.
- HIPPS - High-integrity pressure protection system.
- High pressure turbine control.
- Water service application.
- Control for gas/fluid.
- On-Off valve and control valve.

Applications:
- Severe service operations.
- Low and high temperature application.
- Fire control system.
- Hazardous area.
- Offshore.
- Refineries.

All external and internal parts are AISI316L stainless steel material in compliance with NACE standard MR0175/ISO 15156-1.

The range includes 3 and 5 way function valves, with the following functions available:
- Pneumatic-spring valve
- Pneumatic-pneumatic valve
- 2 position push-pull valve
- Push button-spring valve
- Push button-pneumatic return valve
- Tappet-spring valve
- Roller lever-spring valve
- Pneumatic valve with self-locking manual reset
- Pneumatic valve with self-locking manual reset inverted
- Key-spring valve
- Accessories which include: Non return valve, Uni/bidirectional flow regulator and Quick exhaust valve.
- Blocks dividers or shunts

Modularity
¼” size connection components minimum flow rate from 1000Nl/min.
Thanks to customized body design configuration, Pneumax can provide pneumatic manifold solution, with compact design and easy installation operation.

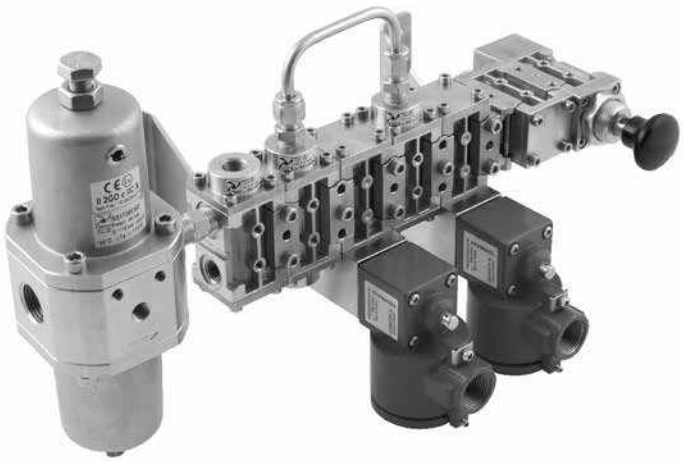

Example: Module with redundants solenoids valves

Construction characteristics

Body	AISI 316L stainless steel
Operators	AISI 316L stainless steel
Spool	AISI 316L stainless steel
Spring	AISI 316 stainless steel
Screws	AISI 316 stainless steel (A4-70 stainless steel)
Seals	FPM (Fluoroelastomer) NBR for low temperatures (-50°C) Standard

Operating range

Fluid	Filtered air. No lubrication needed, if applied it shall be continuous. Inert Gas. Sweet gas (natural).
Operating temperature (for low temperature version L)	-50°C ... +70°C
Operating temperature (for low temperature version H)	-10°C ... +150°C
Maximum operating pressure	12 bar

Certifications available:

ATEX CE Ex II 2 GD c IIC

: **CE Ex II 2G Ex h IIC Gb**
CE Ex II 2D Ex h IIIC Db

: Suitable up to SIL 3

: CU - TR 012

บริษัท ฟลูเทค วัลเวิ
Flu-tech co.,ltd
Fluid Control Specialists

PROCESS AUTOMATION TECHNOLOGY

Pneumatic-spring valve

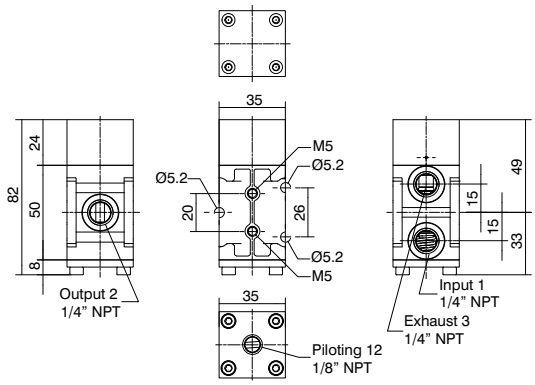

Ordering code

SS1432C1101T

T	TYPE L = Low temperature version H = High temperature version

Minimum piloting pressure 2,5 bar
Fluid:
Filtered air. No lubrication needed, if applied it shall be continuous.
Inert Gas.
Sweet gas (natural).

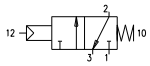

Operational characteristics

Maximum working pressure (bar)	Flow rate at 6 bar with Δp=1 (Nl/min)	Connections	Pilot connections	Weight (gr.)	Cv	kv
12	1000	1/4" NPT	1/8" NPT	500	1,02	15,15

Pneumatic-pneumatic valve

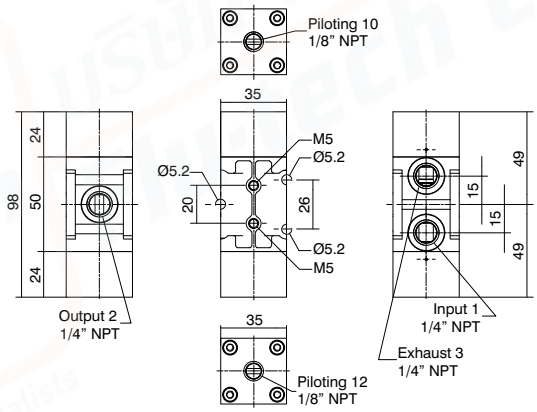

Ordering code

SS1432C1111T

T	TYPE L = Low temperature version H = High temperature version

Minimum piloting pressure 2,5 bar
Fluid:
Filtered air. No lubrication needed, if applied it shall be continuous.
Inert Gas.
Sweet gas (natural).

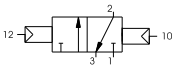

Operational characteristics

Maximum working pressure (bar)	Flow rate at 6 bar with Δp=1 (Nl/min)	Connections	Pilot connections	Weight (gr.)	Cv	kv
12	1000	1/4" NPT	1/8" NPT	660	1,02	15,15

2 position push-pull valve

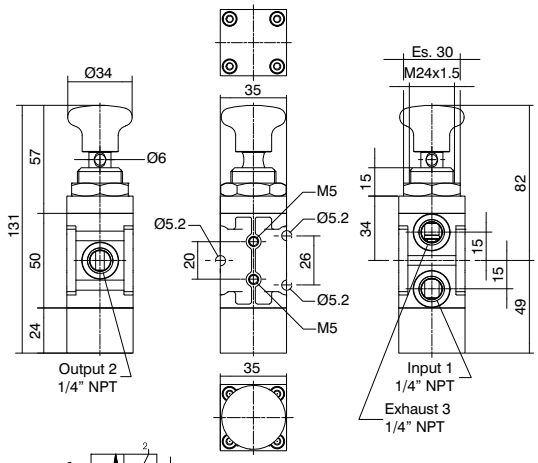

Ordering code

SS1432C0802T

T	TYPE L = Low temperature version H = High temperature version

Actuation force 55N.
Fluid:
Filtered air. No lubrication needed, if applied it shall be continuous.
Inert Gas.
Sweet gas (natural).

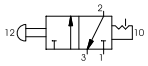

Operational characteristics

Maximum working pressure (bar)	Flow rate at 6 bar with Δp=1 (Nl/min)	Connections	Weight (gr.)	Cv	kv
12	1000	1/4" NPT	620	1,02	15,15

Push button-spring valve

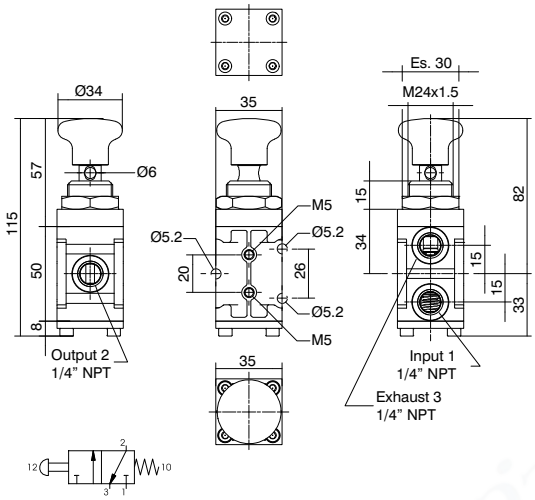

Ordering code
SS1432C0801Ⓣ
TYPE
Ⓣ L = Low temperature version
H = High temperature version

Fluid:
Filtered air. No lubrication needed, if applied it shall be continuous.
Inert Gas.
Sweet gas (natural).

Actuation force at 2 bar = 55N
Actuation force at 12 bar = 105N

Operational characteristics

Maximum working pressure (bar)	Flow rate at 6 bar with Δp=1 (Nl/min)	Connections	Weight (gr.)	Cv	kv
12	1000	1/4” NPT	470	1,02	15,15

Push button-pneumatic return valve

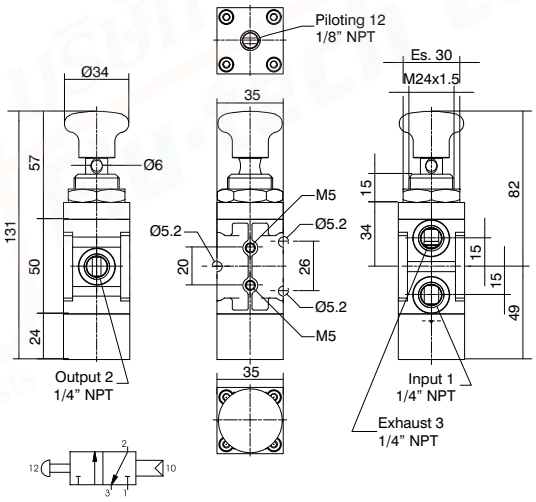

Ordering code
SS1432C0811Ⓣ
TYPE
Ⓣ L = Low temperature version
H = High temperature version

Minimum piloting pressure 2,5 bar
Fluid:
Filtered air. No lubrication needed, if applied it shall be continuous.
Inert Gas.
Sweet gas (natural).

Operational characteristics

Maximum working pressure (bar)	Flow rate at 6 bar with Δp=1 (Nl/min)	Connections	Pilot connections	Weight (gr.)	Cv	kv
12	1000	1/4” NPT	1/8” NPT	600	1,02	15,15

Tappet-spring valve

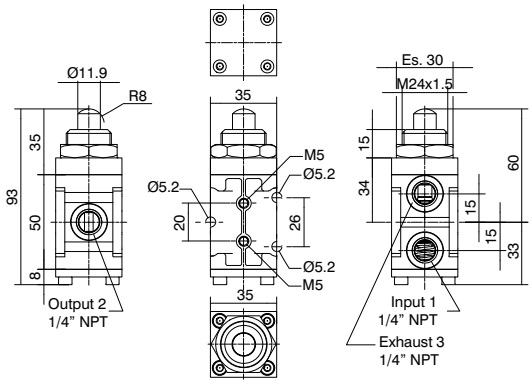

Ordering code
SS1432C0001Ⓣ
TYPE
Ⓣ L = Low temperature version
H = High temperature version

Fluid:
Filtered air. No lubrication needed, if applied it shall be continuous.
Inert Gas.
Sweet gas (natural).

Actuation force at 2 bar = 55N
Actuation force at 12 bar = 105N

Operational characteristics

Maximum working pressure (bar)	Flow rate at 6 bar with Δp=1 (Nl/min)	Connections	Weight (gr.)	Cv	kv
12	1000	1/4” NPT	450	1,02	15,15

PROCESS AUTOMATION TECHNOLOGY

Roller lever-spring valve

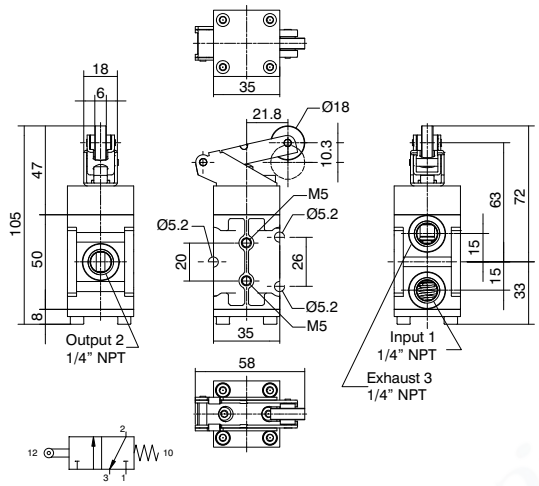

Ordering code
SS1432C0401T
TYPE
T L = Low temperature version
H = High temperature version

Fluid:
Filtered air. No lubrication needed, if applied it shall be continuous.
Inert Gas.
Sweet gas (natural).

Actuation force at 2 bar = 55N
Actuation force at 12 bar = 105N

Operational characteristics					
Maximum working pressure (bar)	Flow rate at 6 bar with Δp=1 (Nl/min)	Connections	Weight (gr.)	Cv	kv
12	1000	1/4" NPT	480	1,02	15,15

Roller lever-pneumatic valve

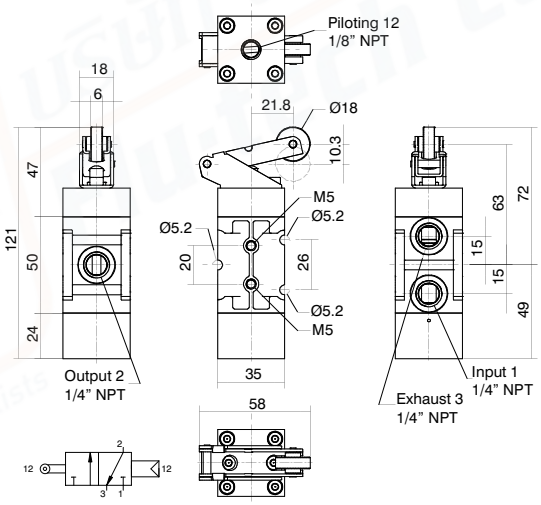

Ordering code
SS1432C0411T
TYPE
T L = Low temperature version
H = High temperature version

Fluid:
Filtered air. No lubrication needed, if applied it shall be continuous.
Inert Gas.
Sweet gas (natural).

Minimum piloting pressure 2,5 bar

Operational characteristics					
Maximum working pressure (bar)	Flow rate at 6 bar with Δp=1 (Nl/min)	Connections	Weight (gr.)	Cv	kv
12	1000	1/4" NPT	480	1,02	15,15

Pneumatic valve with self-locking manual reset

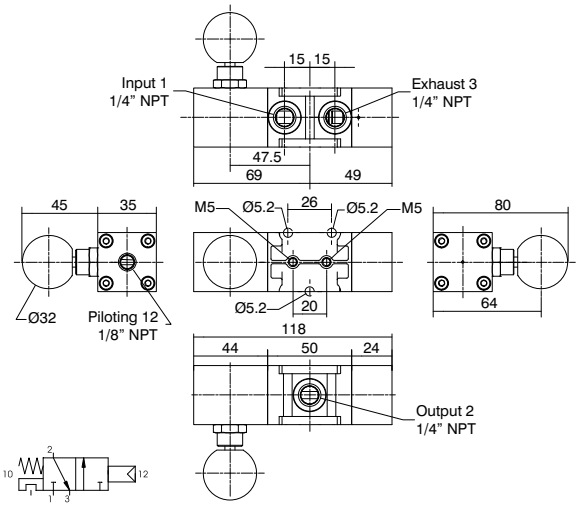

Ordering code
SS1432C1114T
TYPE
T L = Low temperature version
H = High temperature version

Minimum piloting pressure 2,5 bar
Fluid:
Filtered air. No lubrication needed, if applied it shall be continuous.
Inert Gas.
Sweet gas (natural).

Operational characteristics						
Maximum working pressure (bar)	Flow rate at 6 bar with Δp=1 (Nl/min)	Connections	Pilot connections	Weight (gr.)	Cv	kv
12	1000	1/4" NPT	1/8" NPT	860	1,02	15,15

Pneumatic valve with self-locking manual reset inverted

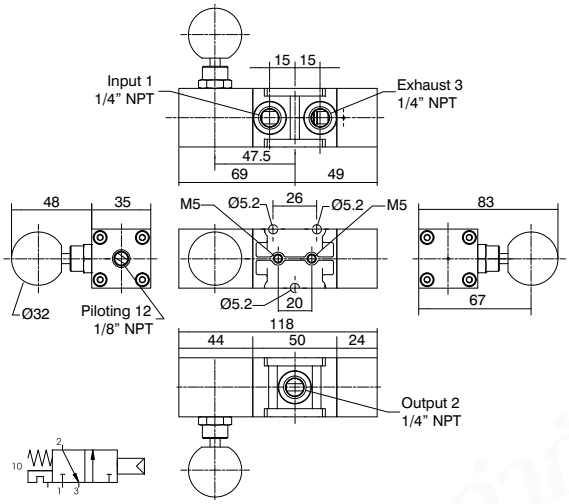

Ordering code
SS1432C1115T
TYPE
T L = Low temperature version
H = High temperature version

Minimum piloting pressure 2,5 bar
Fluid:
Filtered air. No lubrication needed, if applied it shall be continuous.
Inert Gas.
Sweet gas (natural).

Operational characteristics

Maximum working pressure (bar)	Flow rate at 6 bar with Δp=1 (Nl/min)	Connections	Pilot connections	Weight (gr.)	Cv	kv
12	1000	1/4” NPT	1/8” NPT	860	1,02	15,15

Key-spring valve stable

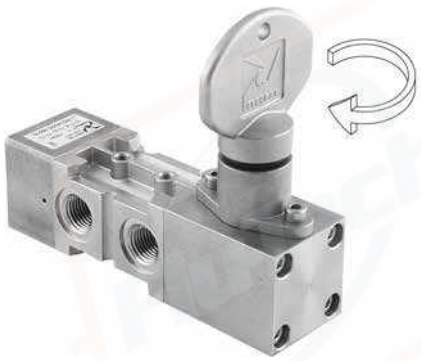

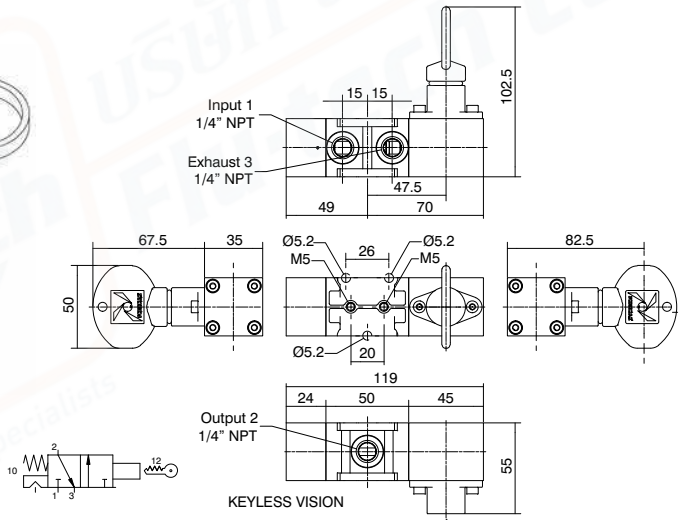

Ordering code
SS1432C1601T
TYPE
T L = Low temperature version
H = High temperature version

Operational characteristics

Maximum working pressure (bar)	Flow rate at 6 bar with Δp=1 (Nl/min)	Connections	Weight (gr.)	Cv	kv
12	1000	1/4” NPT	1020	1,02	15,15

Key-spring valve instable

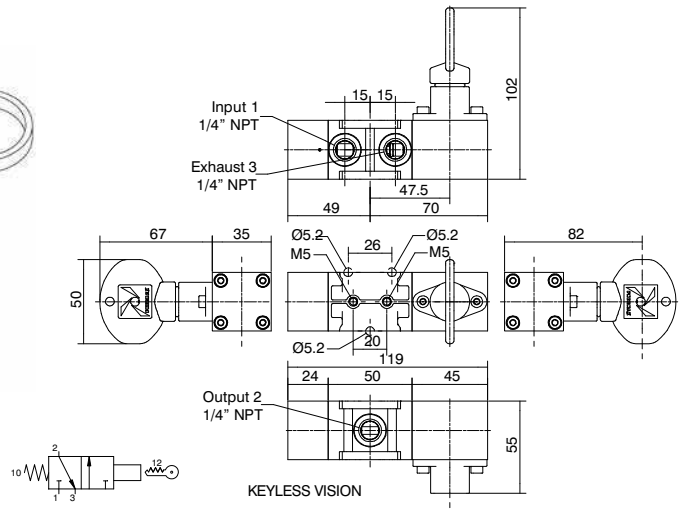

Ordering code
SS1432C2601T
TYPE
T L = Low temperature version
H = High temperature version

Operational characteristics

Maximum working pressure (bar)	Flow rate at 6 bar with Δp=1 (Nl/min)	Connections	Weight (gr.)	Cv	kv
12	1000	1/4” NPT	1020	1,02	15,15

Pneumatic-key valve stable

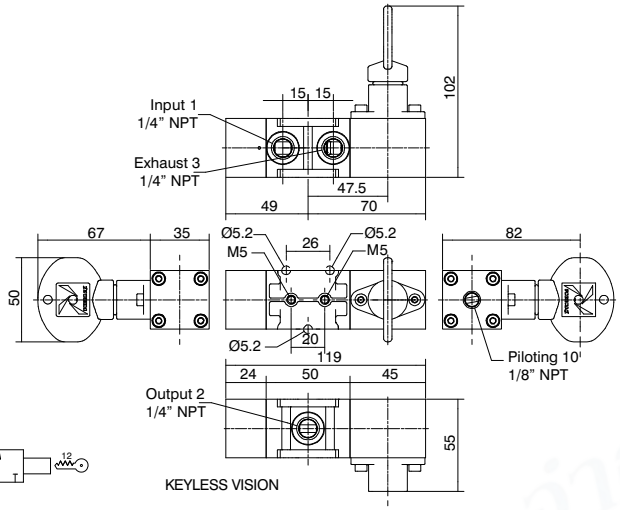

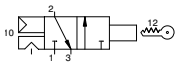

Minimum piloting pressure 2,5 bar, after the valve unlock.

Ordering code
SS1432C1611T
TYPE
T L = Low temperature version
H = High temperature version

Operational characteristics					
Maximum working pressure (bar)	Flow rate at 6 bar with Δp=1 (Nl/min)	Connections	Weight (gr.)	Cv	kv
12	1000	1/4" NPT	1020	1,02	15,15

Pneumatic-key valve instable

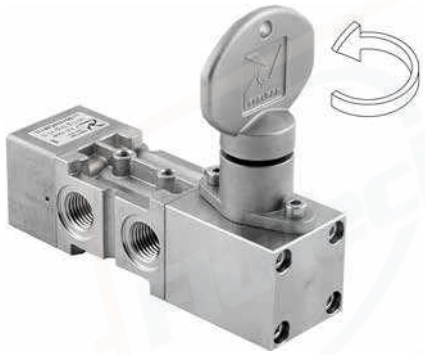

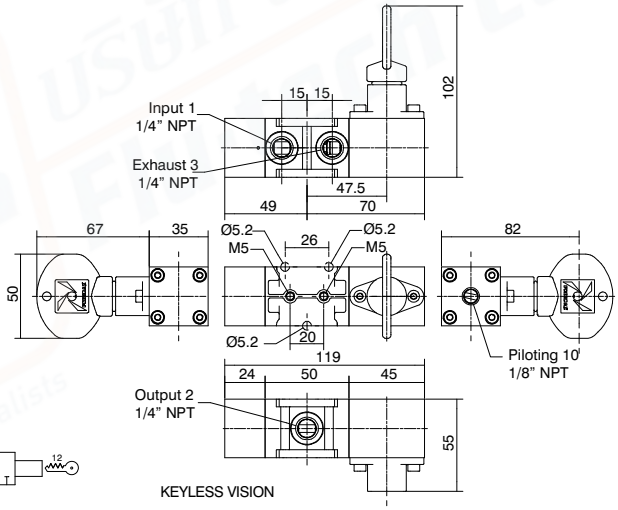

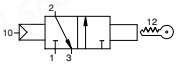

Minimum piloting pressure 2,5 bar

Ordering code
SS1432C2611T
TYPE
T L = Low temperature version
H = High temperature version

Operational characteristics					
Maximum working pressure (bar)	Flow rate at 6 bar with Δp=1 (Nl/min)	Connections	Weight (gr.)	Cv	kv
12	1000	1/4" NPT	1020	1,02	15,15

Pneumatic-spring valve

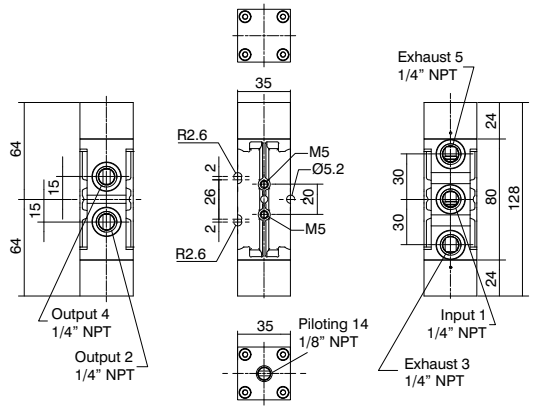

Minimum piloting pressure 2,5 bar
Fluid:
Filtered air. No lubrication needed, if applied it shall be continuous.
Inert Gas.
Sweet gas (natural).

Ordering code

SS145201101T

T	TYPE
	L = Low temperature version
	H = High temperature version

Operational characteristics						
Maximum working pressure (bar)	Flow rate at 6 bar with Δp=1 (Nl/min)	Connections	Pilot connections	Weight (gr.)	Cv	kv
12	1000	1/4” NPT	1/8” NPT	820	1,02	15,15

Pneumatic-pneumatic valve

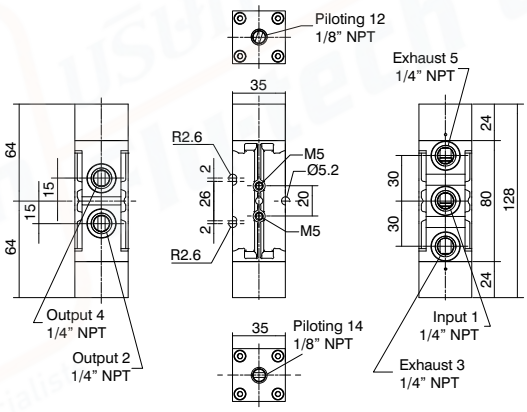

Minimum piloting pressure 2,5 bar
Fluid:
Filtered air. No lubrication needed, if applied it shall be continuous.
Inert Gas.
Sweet gas (natural).

Ordering code

SS145201111T

T	TYPE
	L = Low temperature version
	H = High temperature version

Operational characteristics						
Maximum working pressure (bar)	Flow rate at 6 bar with Δp=1 (Nl/min)	Connections	Pilot connections	Weight (gr.)	Cv	kv
12	1000	1/4” NPT	1/8” NPT	820	1,02	15,15

Pneumatic-pneumatic closed centers valve

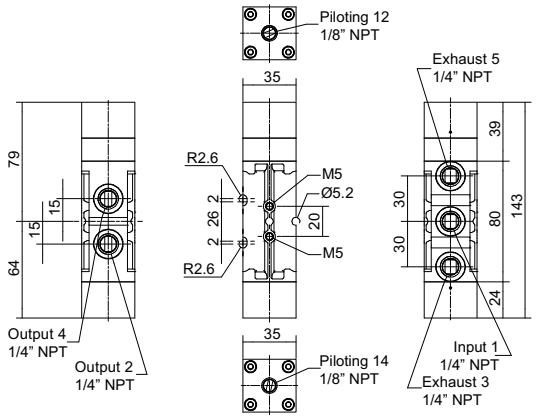

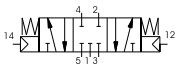

Minimum piloting pressure 2,5 bar
Fluid:
Filtered air. No lubrication needed, if applied it shall be continuous.
Inert Gas.
Sweet gas (natural).

Ordering code

SS145311111T

T	TYPE
	L = Low temperature version
	H = High temperature version

Operational characteristics						
Maximum working pressure (bar)	Flow rate at 6 bar with Δp=1 (Nl/min)	Connections	Pilot connections	Weight (gr.)	Cv	kv
12	1000	1/4” NPT	1/8” NPT	931	1,02	15,15

2 position push-pull valve

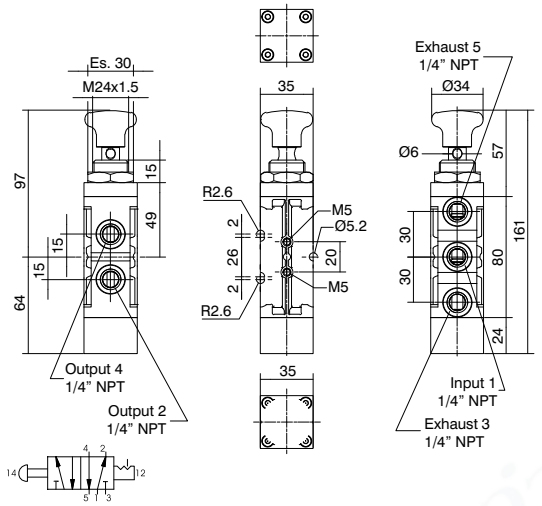

Ordering code

SS145200802T

	TYPE
T	L = Low temperature version
	H = High temperature version

Actuation force 55N.
Fluid:
Filtered air. No lubrication needed, if applied it shall be continuous.
Inert Gas.
Sweet gas (natural).

Operational characteristics

Maximum working pressure (bar)	Flow rate at 6 bar with Δp=1 (Nl/min)	Connections	Weight (gr.)	Cv	kv
12	1000	1/4" NPT	770	1,02	15,15

Push button-spring valve

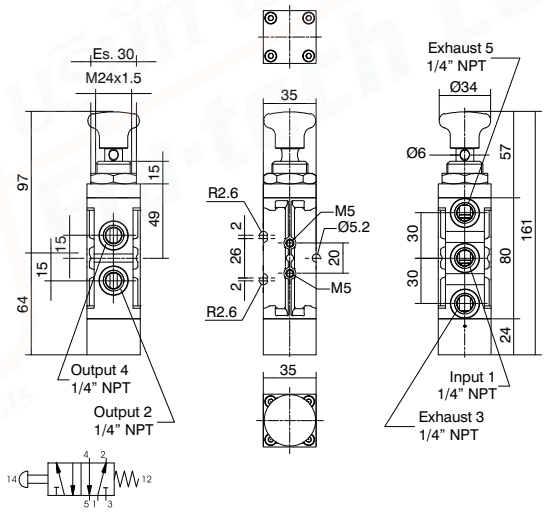

Ordering code

SS145200801T

	TYPE
T	L = Low temperature version
	H = High temperature version

Actuation force 90N
Fluid:
Filtered air. No lubrication needed, if applied it shall be continuous.
Inert Gas.
Sweet gas (natural).

Operational characteristics

Maximum working pressure (bar)	Flow rate at 6 bar with Δp=1 (Nl/min)	Connections	Weight (gr.)	Cv	kv
12	1000	1/4" NPT	780	1,02	15,15

Push button-pneumatic return valve

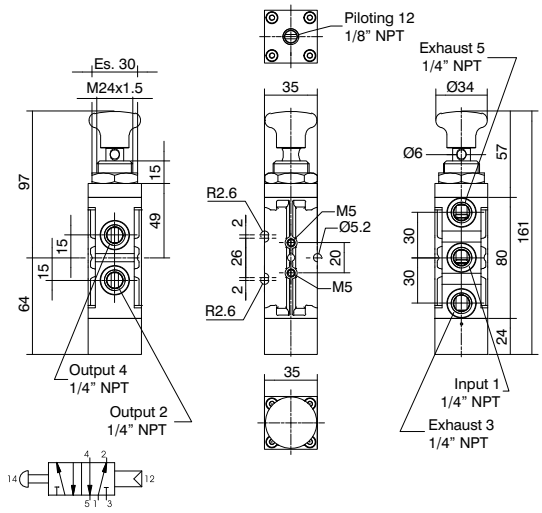

Ordering code

SS145200811T

	TYPE
T	L = Low temperature version
	H = High temperature version

Minimum piloting pressure 2,5 bar
Fluid:
Filtered air. No lubrication needed, if applied it shall be continuous.
Inert Gas.
Sweet gas (natural).

Operational characteristics

Maximum working pressure (bar)	Flow rate at 6 bar with Δp=1 (Nl/min)	Connections	Pilot connections	Weight (gr.)	Cv	kv
12	1000	1/4" NPT	1/8" NPT	780	1,02	15,15

Tappet-spring valve

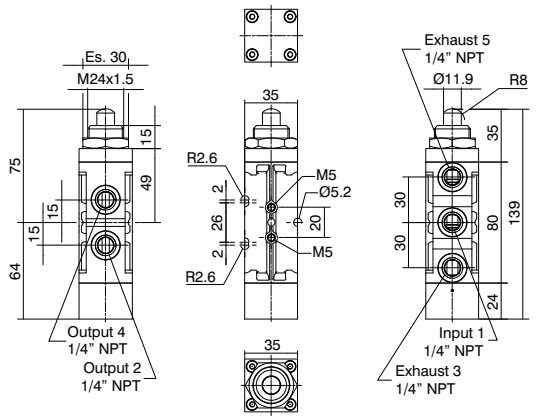

Ordering code

SS145200001T

T	TYPE
	L = Low temperature version
	H = High temperature version

Actuation force 90N
Fluid:
Filtered air. No lubrication needed, if applied it shall be continuous.
Inert Gas.
Sweet gas (natural).

Operational characteristics					
Maximum working pressure (bar)	Flow rate at 6 bar with Δp=1 (Nl/min)	Connections	Weight (gr.)	Cv	kv
12	1000	1/4” NPT	770	1,02	15,15

Roller lever-spring valve

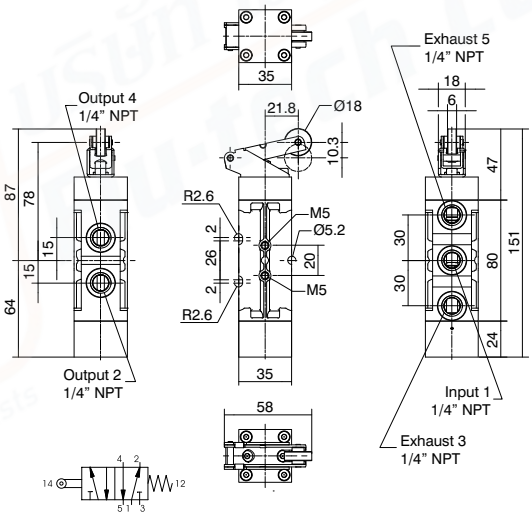

Ordering code

SS145200401T

T	TYPE
	L = Low temperature version
	H = High temperature version

Actuation force 90N
Fluid:
Filtered air. No lubrication needed, if applied it shall be continuous.
Inert Gas.
Sweet gas (natural).

Operational characteristics					
Maximum working pressure (bar)	Flow rate at 6 bar with Δp=1 (Nl/min)	Connections	Weight (gr.)	Cv	kv
12	1000	1/4” NPT	800	1,02	15,15

Roller lever-spring valve

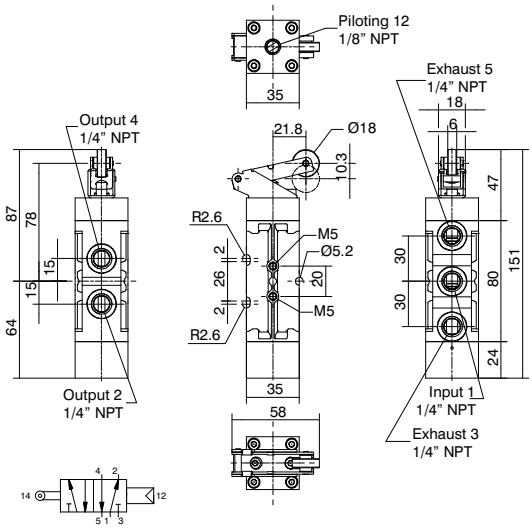

Ordering code

SS145200411T

T	TYPE
	L = Low temperature version
	H = High temperature version

Minimum piloting pressure 2,5 bar
Fluid:
Filtered air. No lubrication needed, if applied it shall be continuous.
Inert Gas.
Sweet gas (natural).

Operational characteristics					
Maximum working pressure (bar)	Flow rate at 6 bar with Δp=1 (Nl/min)	Connections	Weight (gr.)	Cv	kv
12	1000	1/4” NPT	800	1,02	15,15

PROCESS AUTOMATION TECHNOLOGY

Pneumatic valve with self-locking manual reset

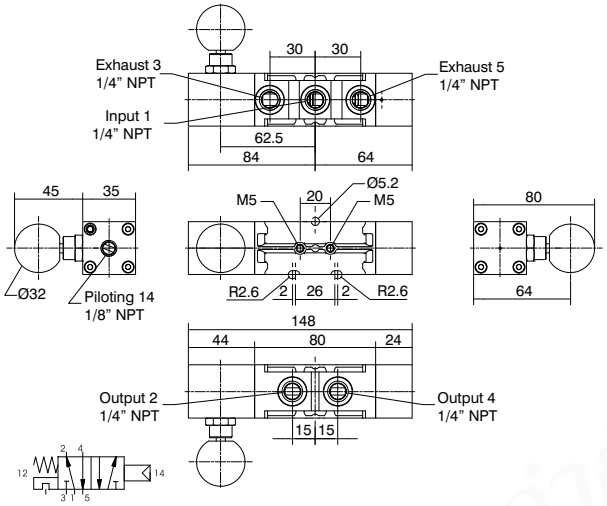

Minimum piloting pressure 2,5 bar
Fluid:
Filtered air. No lubrication needed, if applied it shall be continuous.
Inert Gas.
Sweet gas (natural).

Ordering code
SS145201114T
TYPE
T L = Low temperature version
H = High temperature version

Operational characteristics						
Maximum working pressure (bar)	Flow rate at 6 bar with Δp=1 (Nl/min)	Connections	Pilot connections	Weight (gr.)	Cv	kv
12	1000	1/4" NPT	1/8" NPT	1020	1,02	15,15

Pneumatic valve with self-locking manual reset inverted

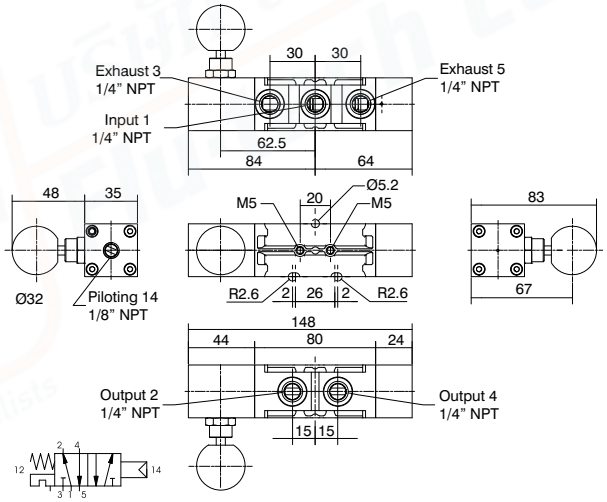

Minimum piloting pressure 2,5 bar
Fluid:
Filtered air. No lubrication needed, if applied it shall be continuous.
Inert Gas.
Sweet gas (natural).

Ordering code
SS145201115T
TYPE
T L = Low temperature version
H = High temperature version

Operational characteristics						
Maximum working pressure (bar)	Flow rate at 6 bar with Δp=1 (Nl/min)	Connections	Pilot connections	Weight (gr.)	Cv	kv
12	1000	1/4" NPT	1/8" NPT	1020	1,02	15,15

Key-spring valve stable

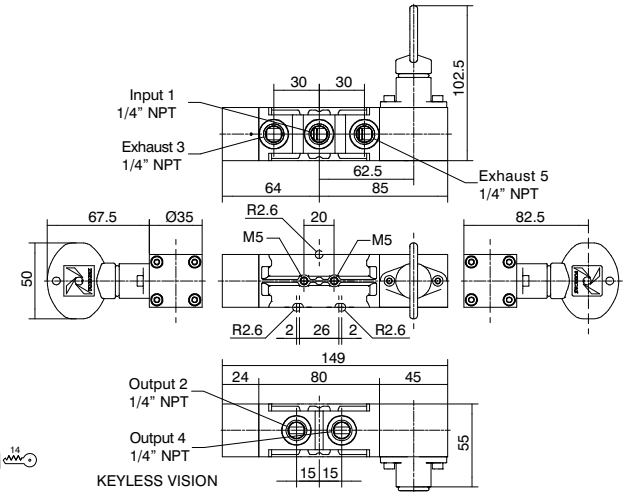

Ordering code
SS145201601T
TYPE
T L = Low temperature version
H = High temperature version

Operational characteristics					
Maximum working pressure (bar)	Flow rate at 6 bar with Δp=1 (Nl/min)	Connections	Weight (gr.)	Cv	kv
12	1000	1/4" NPT	1180	1,02	15,15

Key-spring valve instable

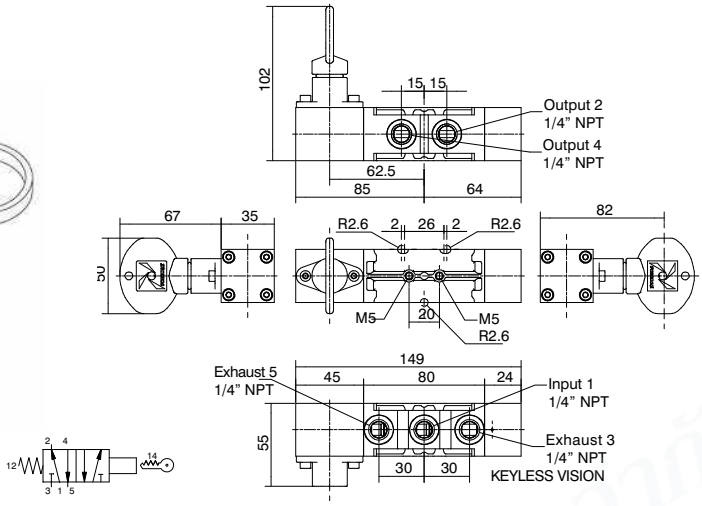

Ordering code
SS145202601Ⓣ
TYPE
Ⓣ L = Low temperature version
H = High temperature version

Operational characteristics					
Maximum working pressure (bar)	Flow rate at 6 bar with Δp=1 (Nl/min)	Connections	Weight (gr.)	Cv	kv
12	1000	1/4” NPT	1180	1,02	15,15

Pneumatic-key valve stable

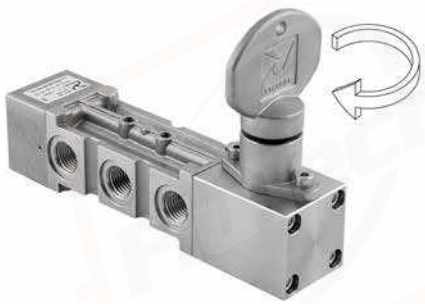

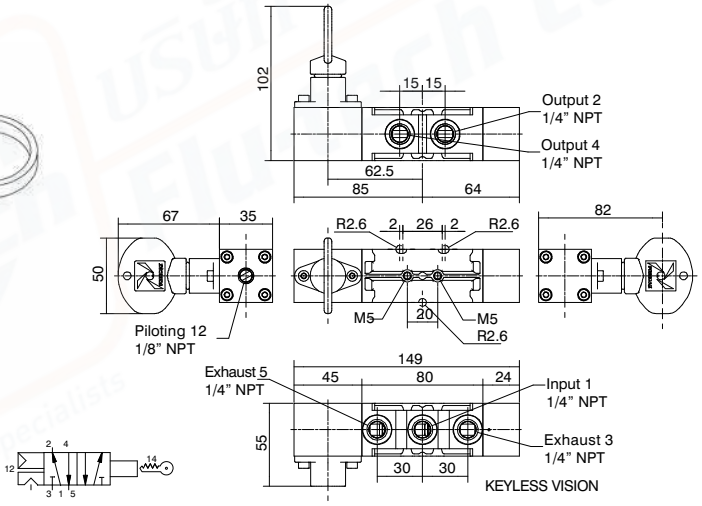

Ordering code
SS145201611Ⓣ
TYPE
Ⓣ L = Low temperature version
H = High temperature version

Operational characteristics					
Maximum working pressure (bar)	Flow rate at 6 bar with Δp=1 (Nl/min)	Connections	Weight (gr.)	Cv	kv
12	1000	1/4” NPT	1180	1,02	15,15

Pneumatic-key valve instable

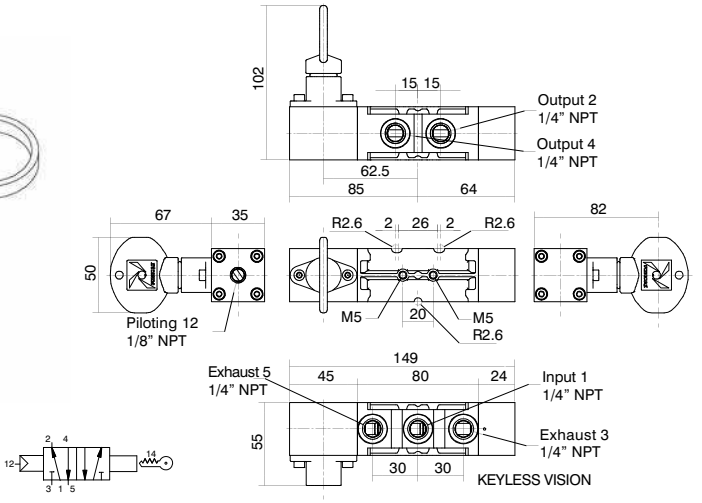

Ordering code
SS145202611Ⓣ
TYPE
Ⓣ L = Low temperature version
H = High temperature version

Operational characteristics					
Maximum working pressure (bar)	Flow rate at 6 bar with Δp=1 (Nl/min)	Connections	Weight (gr.)	Cv	kv
12	1000	1/4” NPT	1180	1,02	15,15

Solenoid valves 1/4” NPT series Steel line

Stainless steel solenoid valves, complete with 30mm solenoid coil and CE marked have been engineered and developed to meet process automation and Oil & Gas severe service requirements, where material performances, product reliability and health and safety issues are critical elements. As a result, Pneumax products are perfectly suitable to work with sweet gas media and corrosive / aggressive gases.

All external and internal parts are AISI316L stainless steel material in compliance with NACE standard MR0175/ISO 15156-1.

The range includes solenoid valves with 3 and 5 ways functions, complete with self feeding solenoids, designed according to the following configuration:

- Solenoid-spring valve
- Solenoid-solenoid valve

Pneumax solenoid valves have 1/4” NPT connections with 1000Nl/min maximum flowrate.
Pneumax solenoid valve utmost adaptability represent one of the main features to provide customized solution and module assembly solution, since both single mounting and integrated module design are available; thanks to distinctive Pneumax valve body design.

Construction characteristics

Body	AISI 316L stainless steel
Operators	AISI 316L stainless steel
Spool	AISI 316L stainless steel
Spring	AISI 316 stainless steel
Screws	AISI 316 stainless steel (A4-70 stainless steel)
Seals	FPM (Fluoroelastomer) NBR for low temperatures (**available on request**)

Operating range

Fluid	Filtered air. No lubrication needed, if applied it shall be continuous. Inert Gas. Sweet gas (natural).
Operating temperature	-10°C ... +130°C
Note: The suitable operating temperature is limited by the most restrictive component, which is the pilot, regardless of the type of seals used in the valve spool.	
Maximum operating pressure	10 bar

Electrical (Electropilot) construction characteristics

Cores	Ferromagnetic stainless steel
Guide tube	Stainless steel
Springs	Stainless steel
Seals	FPM (Fluoroelastomer) NBR (**available on request**)
Incorporation	PA reiforced fibreglass
Wire insulation	F (Class H **available on request**)
Nominal voltage	24 V DC 24, 110, 220/230 V AC
Power consumption DC	10W
Power consumption AC	15VA
Electrical connection	According to DIN43650 A
IP Rating	IP65
Tolerance on voltage supply	±10%
ED continuous service	100%

Certifications available:

Non ATEX marked product

SIL : Suitable up to SIL 3

EAC

Solenoid-spring valve

Ordering code
SS1432C2T01H
TENSION
0 = 12 V DC
T 1 = 24 V DC
B = 24 V AC (50/60 Hz)
E = 230 V AC (50/60 Hz)

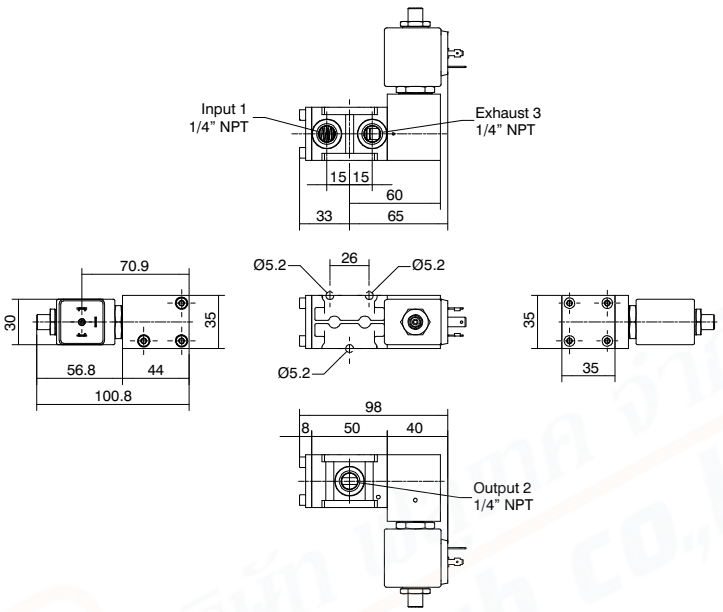

Minimum piloting pressure 2,5 bar
Fluid:
Filtered air. No lubrication needed, if applied it shall be continuous.
Inert Gas.
Sweet gas (natural).

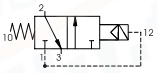

Operational characteristics					
Maximum working pressure (bar)	Flow rate at 6 bar with Δp=1 (Nl/min)	Connections	Weight (gr.)	Cv	kv
10	1000	1/4” NPT	900	1,02	15,15

Solenoid-solenoid valve

Ordering code
SS1432C2T2TH
TENSION
0 = 12 V DC
T 1 = 24 V DC
B = 24 V AC (50/60 Hz)
E = 230 V AC (50/60 Hz)

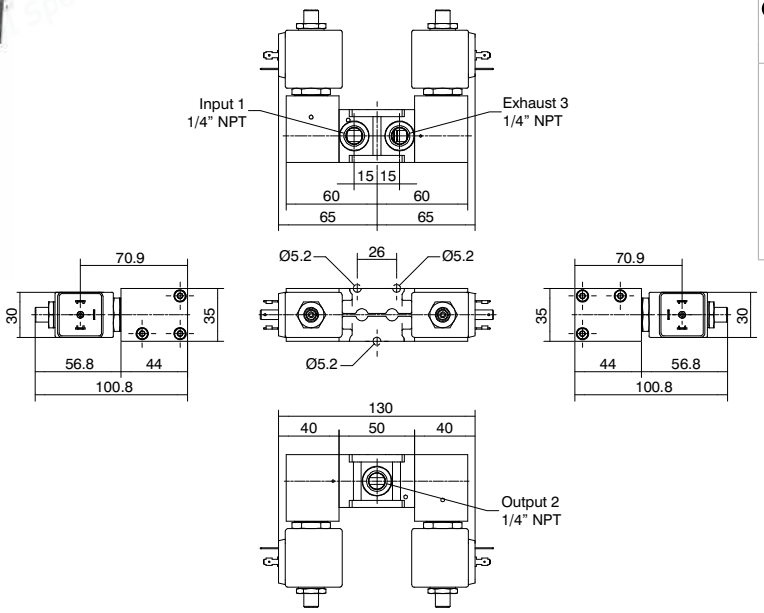

Minimum piloting pressure 2,5 bar
Fluid:
Filtered air. No lubrication needed, if applied it shall be continuous.
Inert Gas.
Sweet gas (natural).

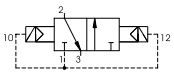

Operational characteristics					
Maximum working pressure (bar)	Flow rate at 6 bar with Δp=1 (Nl/min)	Connections	Weight (gr.)	Cv	kv
10	1000	1/4” NPT	1400	1,02	15,15

PROCESS AUTOMATION TECHNOLOGY

Solenoid-spring valve

Ordering code
SS145202T01H
TENSION
0 = 12 V DC
T 1 = 24 V DC
B = 24 V AC (50/60 Hz)
E = 230 V AC (50/60 Hz)

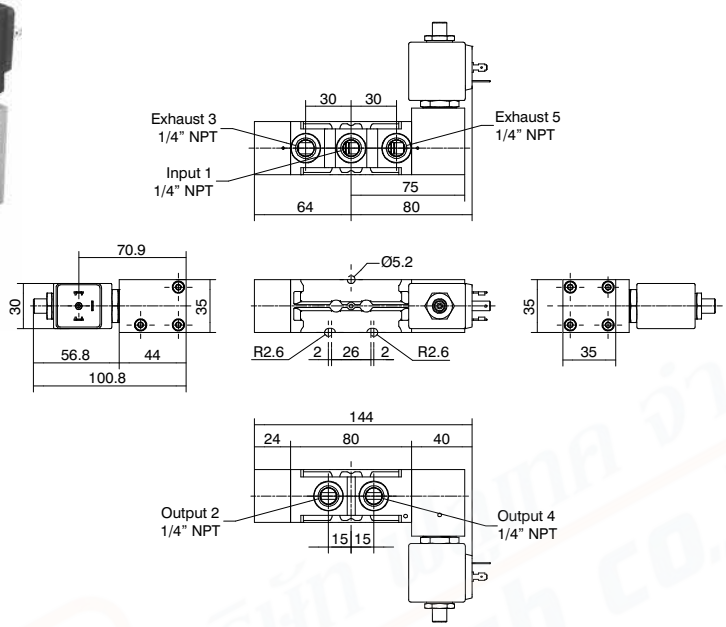

Minimum piloting pressure 2,5 bar
Fluid:
Filtered air. No lubrication needed, if applied it shall be continuous.
Inert Gas.
Sweet gas (natural).

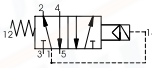

Operational characteristics					
Maximum working pressure (bar)	Flow rate at 6 bar with Δp=1 (Nl/min)	Connections	Weight (gr.)	Cv	kv
10	1000	1/4" NPT	1200	1,02	15,15

Solenoid-solenoid valve

Ordering code
SS145202T2TH
TENSION
0 = 12 V DC
T 1 = 24 V DC
B = 24 V AC (50/60 Hz)
E = 230 V AC (50/60 Hz)

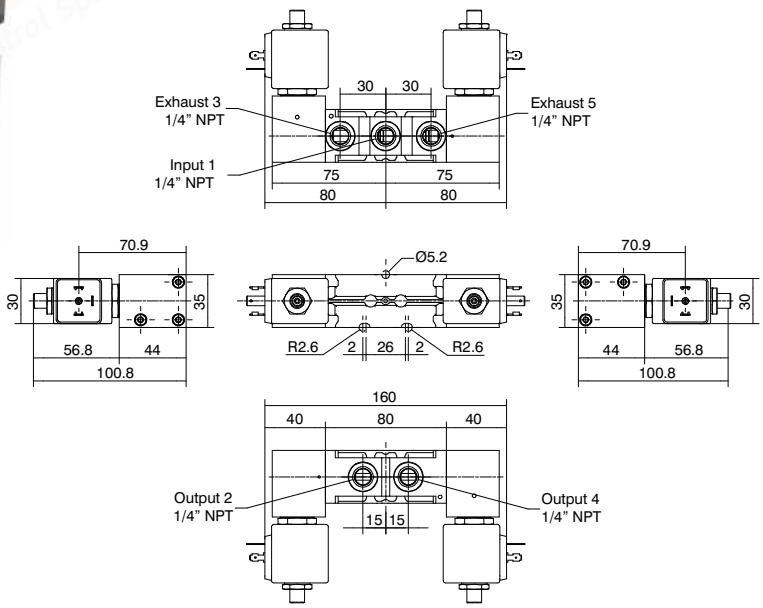

Minimum piloting pressure 2,5 bar
Fluid:
Filtered air. No lubrication needed, if applied it shall be continuous.
Inert Gas.
Sweet gas (natural).

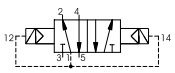

Operational characteristics					
Maximum working pressure (bar)	Flow rate at 6 bar with Δp=1 (Nl/min)	Connections	Weight (gr.)	Cv	kv
10	1000	1/4" NPT	1600	1,02	15,15

Solenoid valves 1/4” NPT series Steel line - For safe area with IP66 stainless steel housing

Stainless steel solenoid valves, complete with IP66 rated solenoid coil in a stainless steel housing and CE marked have been engineered and developed to meet process automation and Oil & Gas severe service requirements, where material performances, product reliability and health and safety issues are critical elements. As a result, Pneumax products are perfectly suitable to work with sweet gas media and corrosive / aggressive gases.

All external and internal parts are AISI316L stainless steel material in compliance with NACE standard MR0175/ISO 15156-1.

The range includes solenoid valves with 3 and 5 ways functions, complete with self feeding solenoids, designed according to the following configuration:
- Solenoid-spring valve
- Solenoid-solenoid valve
- Solenoid valve with self-locking manual reset
- Solenoid valve with self-locking manual reset inverted.

Pneumax solenoid valves have 1/4” NPT connections with 1000Nl/min maximum flow rate.
Pneumax solenoid valve utmost adaptability represent one of the main features to provide customized solution and module assembly solution, since both single mounting and integrated module design are available; thanks to distinctive Pneumax valve body design.

Construction characteristics

Body	AISI 316L stainless steel
Operators	AISI 316L stainless steel
Spool	AISI 316L stainless steel
Spring	AISI 316 stainless steel
Screws	AISI 316 stainless steel (A4-70 stainless steel)
Seals	NBR for low temperatures FPM (Fluoroelastomer) (**available on request**)

Operating range

Fluid	Filtered air. No lubrication needed, if applied it shall be continuous. Inert Gas. Sweet gas (natural).
Operating temperature	-20°C ... +70°C
Note: The suitable operating temperature is limited by the most restrictive component, which is the pilot, regardless of the type of seals used in the valve spool.	
Maximum operating pressure	10 bar

Electrical (Electropilot) construction characteristics

Housing	304 stainless steel with epoxy paint
Armour / Cores	Ferromagnetic stainless steel
Springs	Stainless steel
Seals	FPM (Fluoroelastomer)
Incorporation	PTB 30% glass load
Wire insulation	H
Nominal voltage	24 V DC 24, 110, 220 V AC
Power consumption DC	2,4W
Power consumption AC	10VA (Inrush), 5VA (Running)
Connection for cable entry	M20x1.5 (1/2” NPT **available on request**)
Electrical connection	Screw terminals 2 Poles 2.5 mm
IP Rating	IP66
Tolerance on voltage supply	±10%
ED continuous service	100%

Certifications available:

Non ATEX marked product

SIL : Suitable up to SIL 3

EAC

PROCESS AUTOMATION TECHNOLOGY

Solenoid-spring valve

Ordering code
SS1432CA(T)01L
TENSION
1 = 24 V DC
(T) 2 = 24 V AC (50/60 Hz)
3 = 110 V AC (50/60 Hz)
4 = 220 V AC (50/60 Hz)

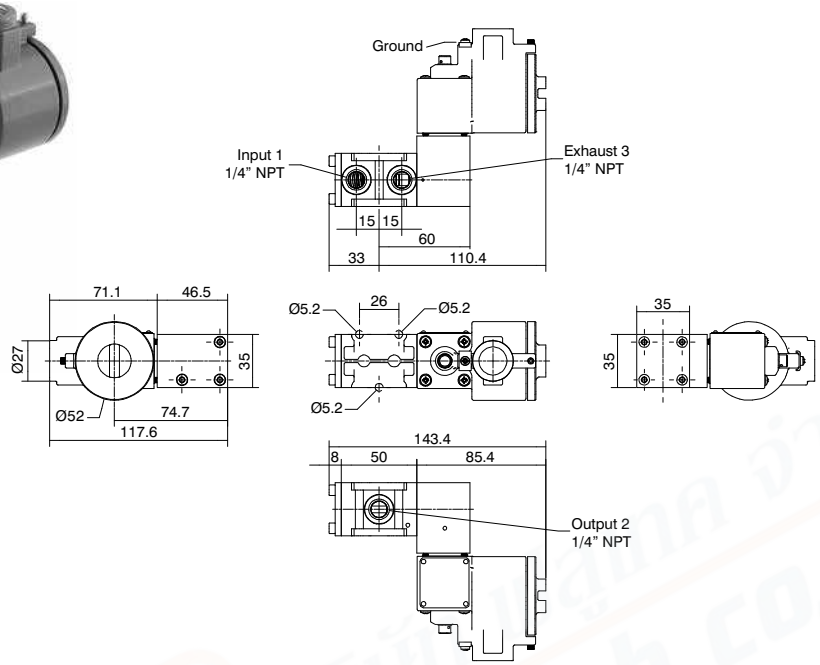

Minimum piloting pressure 2,5 bar
Fluid:
Filtered air. No lubrication needed, if applied it shall be continuous.
Inert Gas.
Sweet gas (natural).

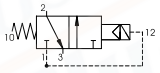

Operational characteristics					
Maximum working pressure (bar)	Flow rate at 6 bar with Δp=1 (Nl/min)	Connections	Weight (gr.)	Cv	kv
10	1000	1/4" NPT	1500	1,02	15,15

Solenoid-solenoid valve

Ordering code
SS1432CA(T)A(T)L
TENSION
1 = 24 V DC
(T) 2 = 24 V AC (50/60 Hz)
3 = 110 V AC (50/60 Hz)
4 = 220 V AC (50/60 Hz)

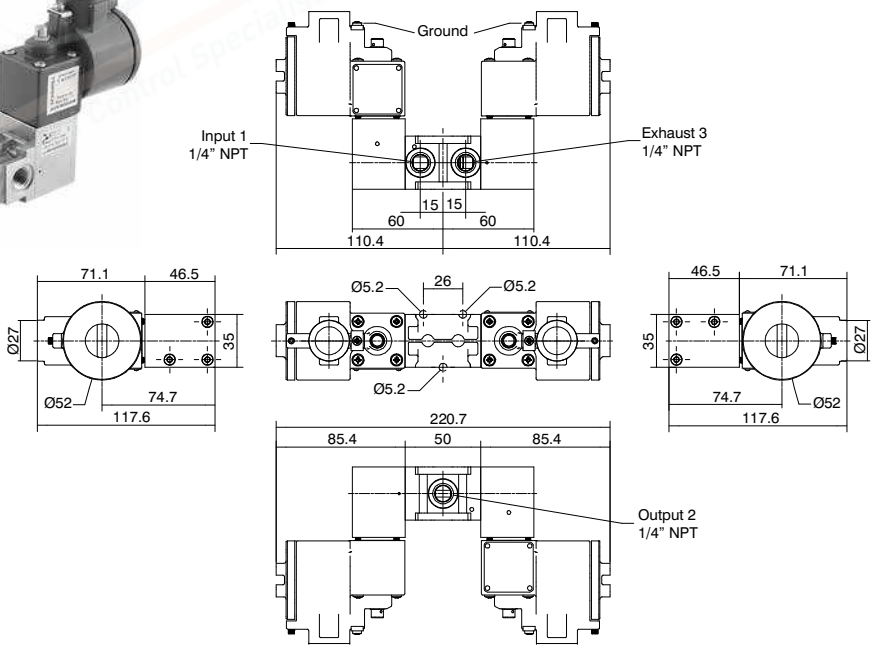

Minimum piloting pressure 2,5 bar
Fluid:
Filtered air. No lubrication needed, if applied it shall be continuous.
Inert Gas.
Sweet gas (natural).

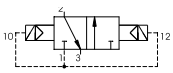

Operational characteristics					
Maximum working pressure (bar)	Flow rate at 6 bar with Δp=1 (Nl/min)	Connections	Weight (gr.)	Cv	kv
10	1000	1/4" NPT	2600	1,02	15,15

Solenoid-spring valve

Ordering code
SS14520AT01L
TENSION
1 = 24 V DC
T 2 = 24 V AC (50/60 Hz)
3 = 110 V AC (50/60 Hz)
4 = 220 V AC (50/60 Hz)

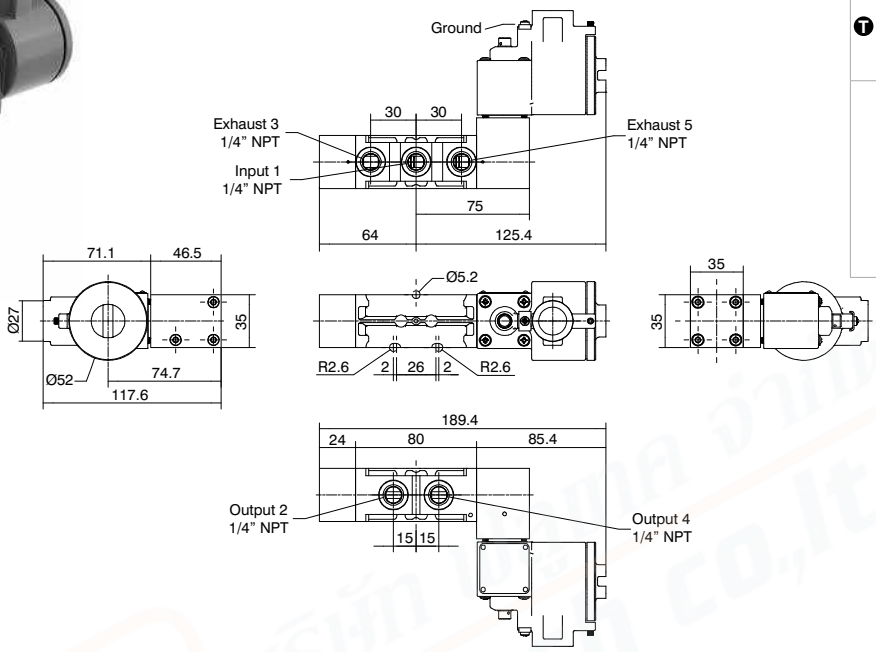

Minimum piloting pressure 2,5 bar
Fluid:
Filtered air. No lubrication needed, if applied it shall be continuous.
Inert Gas.
Sweet gas (natural).

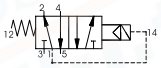

Operational characteristics					
Maximum working pressure (bar)	Flow rate at 6 bar with Δp=1 (Nl/min)	Connections	Weight (gr.)	Cv	kv
10	1000	1/4” NPT	1800	1,02	15,15

Solenoid-solenoid valve

Ordering code
SS14520ATATL
TENSION
1 = 24 V DC
T 2 = 24 V AC (50/60 Hz)
3 = 110 V AC (50/60 Hz)
4 = 220 V AC (50/60 Hz)

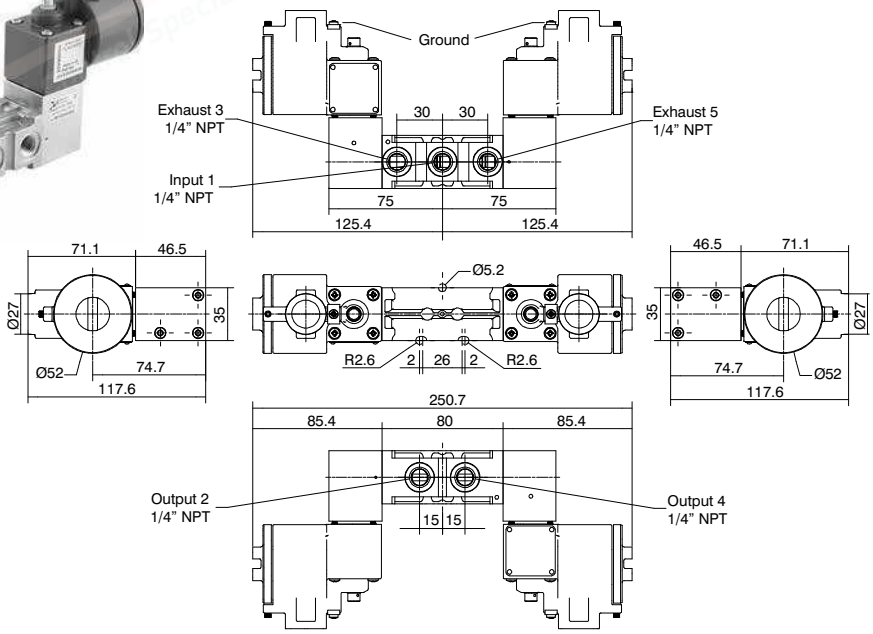

Minimum piloting pressure 2,5 bar
Fluid:
Filtered air. No lubrication needed, if applied it shall be continuous.
Inert Gas.
Sweet gas (natural).

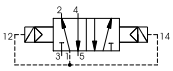

Operational characteristics					
Maximum working pressure (bar)	Flow rate at 6 bar with Δp=1 (Nl/min)	Connections	Weight (gr.)	Cv	kv
10	1000	1/4” NPT	2750	1,02	15,15

PROCESS AUTOMATION TECHNOLOGY

Solenoid valve with self-locking manual reset

Ordering code
SS1432CAⓉ14L
TENSION
1 = 24 V DC
Ⓣ 2 = 24 V AC (50/60 Hz)
3 = 110 V AC (50/60 Hz)
4 = 220 V AC (50/60 Hz)

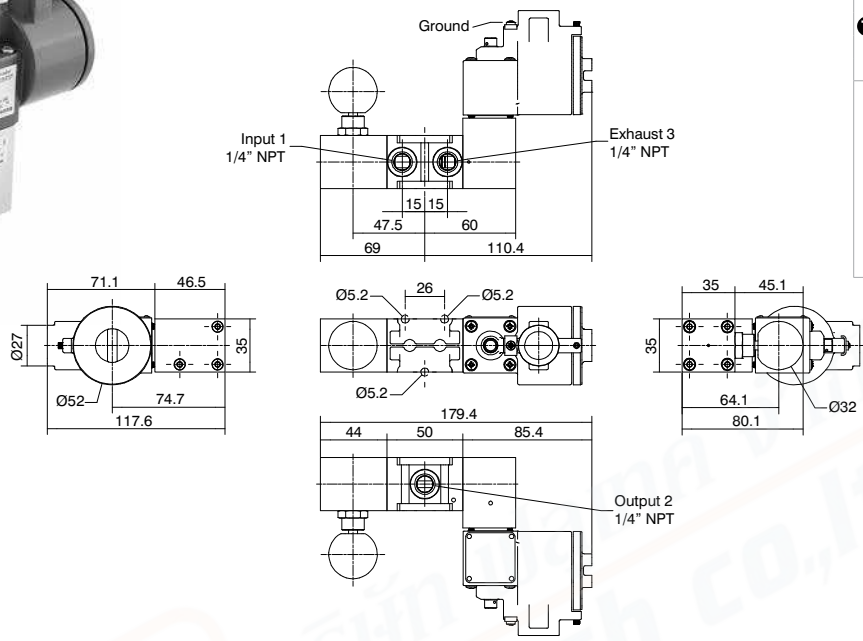

Minimum piloting pressure 2,5 bar
Fluid:
Filtered air. No lubrication needed, if applied it shall be continuous.
Inert Gas.
Sweet gas (natural).

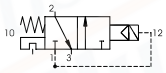

Operational characteristics					
Maximum working pressure (bar)	Flow rate at 6 bar with Δp=1 (Nl/min)	Connections	Weight (gr.)	Cv	kv
10	1000	1/4" NPT	1850	1,02	15,15

Solenoid valve with self-locking manual reset inverted

Ordering code
SS1432CAⓉ15L
TENSION
1 = 24 V DC
Ⓣ 2 = 24 V AC (50/60 Hz)
3 = 110 V AC (50/60 Hz)
4 = 220 V AC (50/60 Hz)

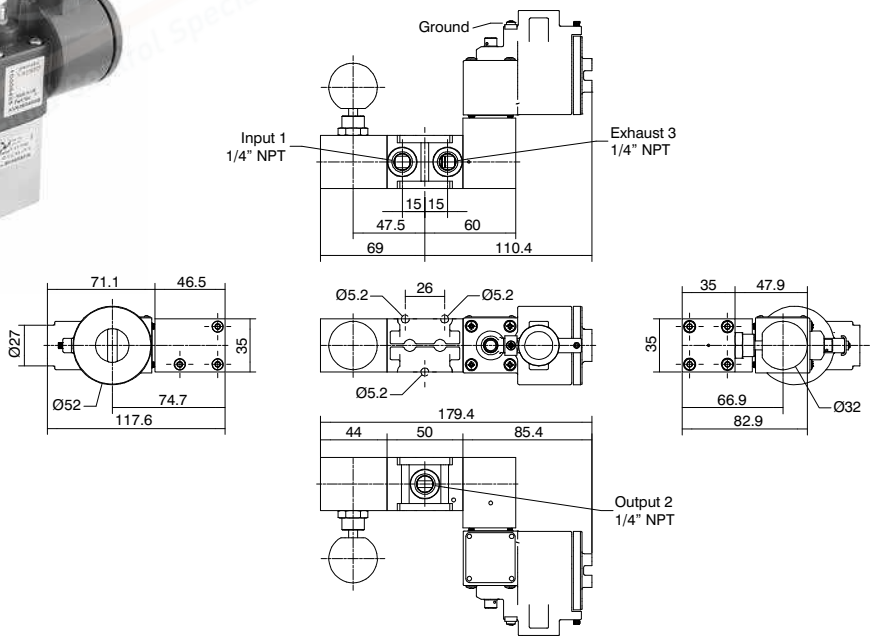

Minimum piloting pressure 2,5 bar
Fluid:
Filtered air. No lubrication needed, if applied it shall be continuous.
Inert Gas.
Sweet gas (natural).

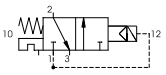

Operational characteristics					
Maximum working pressure (bar)	Flow rate at 6 bar with Δp=1 (Nl/min)	Connections	Weight (gr.)	Cv	kv
10	1000	1/4" NPT	1850	1,02	15,15

Solenoid valve with self-locking manual reset

Ordering code	
SS14520AT14L	
	TENSION
	1 = 24 V DC
T	2 = 24 V AC (50/60 Hz)
	3 = 110 V AC (50/60 Hz)
	4 = 220 V AC (50/60 Hz)

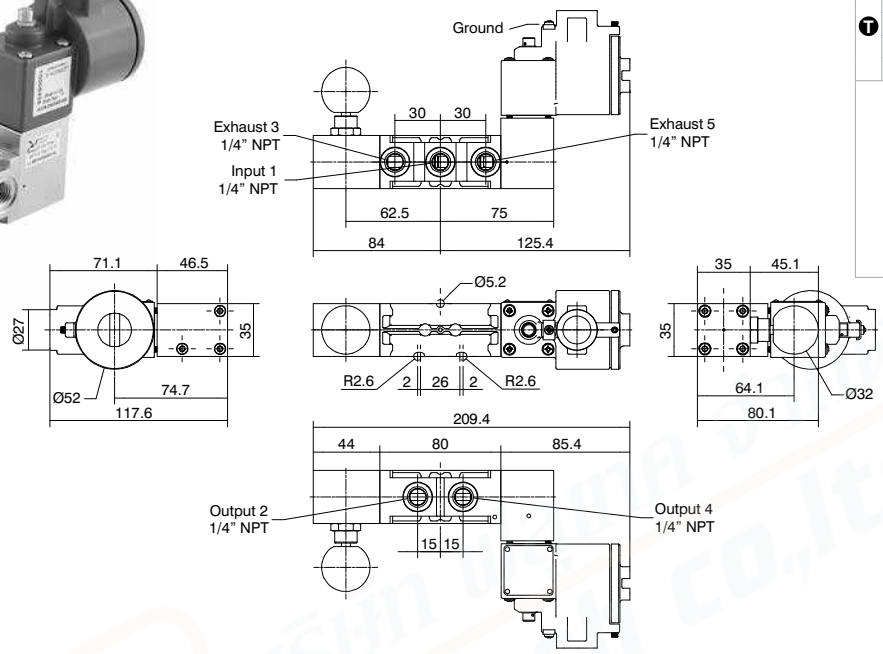

Minimum piloting pressure 2,5 bar
Fluid:
Filtered air. No lubrication needed, if applied it shall be continuous.
Inert Gas.
Sweet gas (natural).

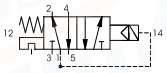

Operational characteristics					
Maximum working pressure (bar)	Flow rate at 6 bar with Δp=1 (Nl/min)	Connections	Weight (gr.)	Cv	kv
10	1000	1/4” NPT	2000	1,02	15,15

Solenoid valve with self-locking manual reset inverted

Ordering code	
SS14520AT15L	
	TENSION
	1 = 24 V DC
T	2 = 24 V AC (50/60 Hz)
	3 = 110 V AC (50/60 Hz)
	4 = 220 V AC (50/60 Hz)

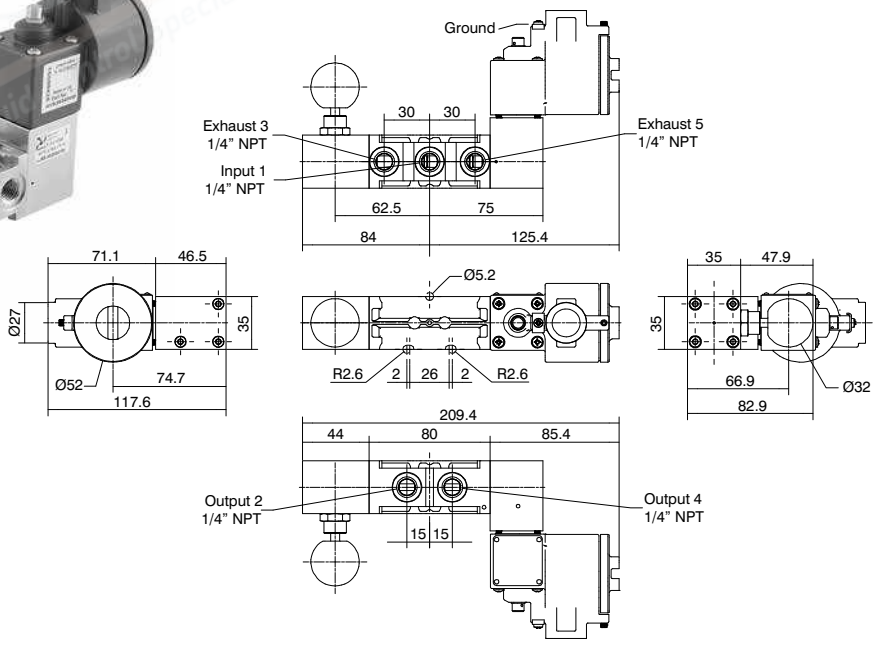

Minimum piloting pressure 2,5 bar
Fluid:
Filtered air. No lubrication needed, if applied it shall be continuous.
Inert Gas.
Sweet gas (natural).

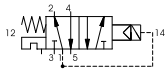

Operational characteristics					
Maximum working pressure (bar)	Flow rate at 6 bar with Δp=1 (Nl/min)	Connections	Weight (gr.)	Cv	kv
10	1000	1/4” NPT	2000	1,02	15,15

Solenoid valves 1/4” NPT series Steel line - IP66 Exd Explosion protection

Stainless steel solenoid valves, complete with IP66 Exd Explosion protection rated solenoid coil in a stainless steel housing and CE marked have been engineered and developed to meet process automation and Oil & Gas severe service requirements, where material performances, product reliability and health and safety issues are critical elements. As a result, Pneumax products are perfectly suitable to work with sweet gas media and corrosive / aggressive gases.

All external and internal parts are AISI316L stainless steel material in compliance with NACE standard MR0175/ISO 15156-1.
The range includes solenoid valves with 3 and 5 ways functions, complete with self feeding solenoids, designed according to the following configuration:
- Solenoid-spring valve
- Solenoid-solenoid valve
- Solenoid valve with self-locking manual reset
- Solenoid valve with self-locking manual reset inverted.

Pneumax solenoid valves have 1/4” NPT connections with 1000Nl/min maximum flow rate.
Pneumax solenoid valve utmost adaptability represent one of the main features to provide customized solution and module assembly solution, since both single mounting and integrated module design are available; thanks to distinctive Pneumax valve body design.

Construction characteristics

Body	AISI 316L stainless steel
Operators	AISI 316L stainless steel
Spool	AISI 316L stainless steel
Spring	AISI 316 stainless steel
Screws	AISI 316 stainless steel (A4-70 stainless steel)
Seals	NBR for low temperatures FPM (Fluoroelastomer) (**available on request**)

Operating range

Fluid	Filtered air. No lubrication needed, if applied it shall be continuous. Inert Gas. Sweet gas (natural).
Operating temperature for DC version	-50°C ... +70°C
Operating temperature for AC version	-50°C ... +55°C
Maximum operating pressure	10 bar

Electrical (Electropilot) construction characteristics

Housing	304 stainless steel with epoxy paint
Armour / Cores	Ferromagnetic stainless steel
Springs	Stainless steel
Seals	FPM (Fluoroelastomer)
Incorporation	PTB 30% glass load
Wire insulation	H
Nominal voltage	24 V DC 24, 110, 220/230 V AC
Power consumption DC	3W
Power consumption AC	10VA (Inrush), 5VA (Running)
Connection for cable entry	M20x1.5 (1/2” NPT **available on request**)
Electrical connection	Screw terminals 2 Poles 2.5 mm
IP Rating	IP66
Tolerance on voltage supply	±10%
ED continuous service	100%

Certifications available:

ATEX CE Ex II 2 GD c IIC
: [CE Ex **II 2G Ex h IIC Gb**
CE Ex **II 2D Ex h IIIC Db**]

: International certification for explosive atmospheres

: Suitable up to SIL 3

: Nepsy approval - China

: CU - TR 012

ATEX, SIL and EAC Ex: refer to products in the various sections to the catalogues.
IECEx and NEPSI: refer to Pneumatrol pilots installed upon each valve.

Solenoid-spring valve

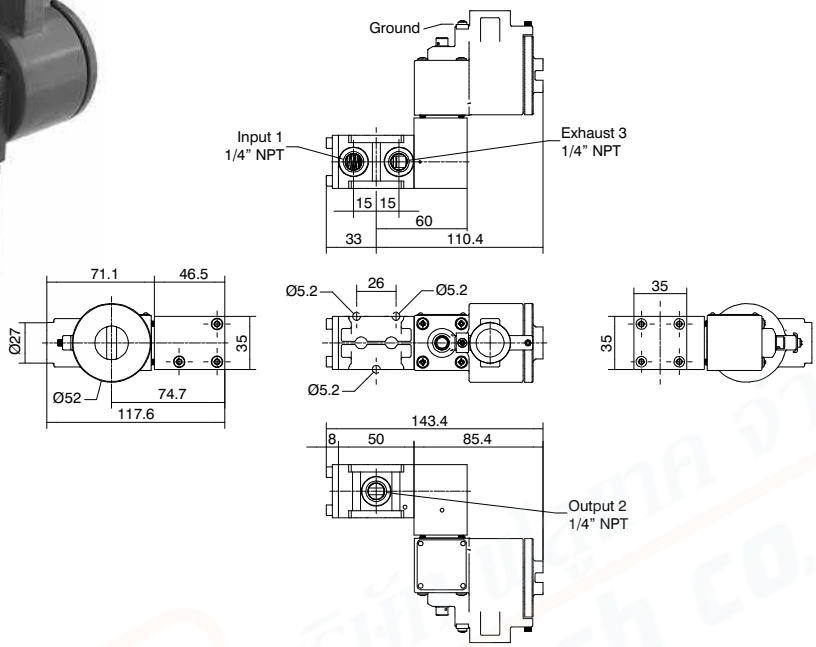

Ordering code
SS1432CBT01L
TENSION
1 = 24 V DC
T 2 = 24 V AC (50/60 Hz)
3 = 110 V AC (50/60 Hz)
4 = 220 V AC (50/60 Hz)

Minimum piloting pressure 2,5 bar
Fluid:
Filtered air. No lubrication needed, if applied it shall be continuous.
Inert Gas.
Sweet gas (natural).

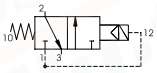

Operational characteristics					
Maximum working pressure (bar)	Flow rate at 6 bar with Δp=1 (Nl/min)	Connections	Weight (gr.)	Cv	kv
10	1000	1/4” NPT	1500	1,02	15,15

Solenoid-solenoid valve

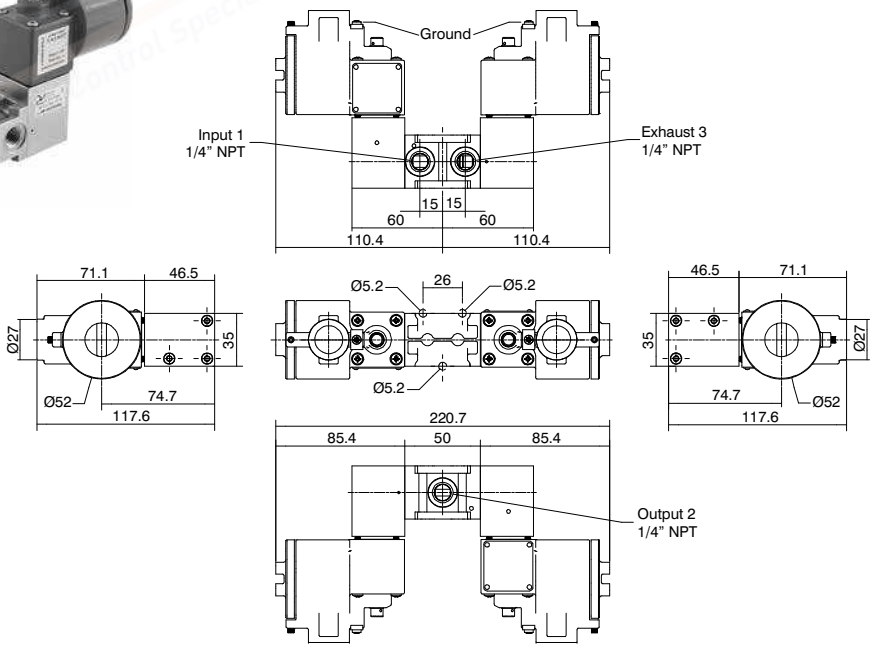

Ordering code
SS1432CBTBTL
TENSION
1 = 24 V DC
T 2 = 24 V AC (50/60 Hz)
3 = 110 V AC (50/60 Hz)
4 = 220 V AC (50/60 Hz)

Minimum piloting pressure 2,5 bar
Fluid:
Filtered air. No lubrication needed, if applied it shall be continuous.
Inert Gas.
Sweet gas (natural).

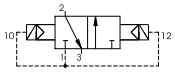

Operational characteristics					
Maximum working pressure (bar)	Flow rate at 6 bar with Δp=1 (Nl/min)	Connections	Weight (gr.)	Cv	kv
10	1000	1/4” NPT	2600	1,02	15,15

Solenoid-spring valve

Ordering code
SS14520BT01L
TENSION
1 = 24 V DC
T 2 = 24 V AC (50/60 Hz)
3 = 110 V AC (50/60 Hz)
4 = 220 V AC (50/60 Hz)

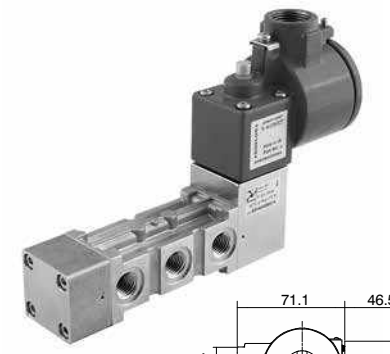

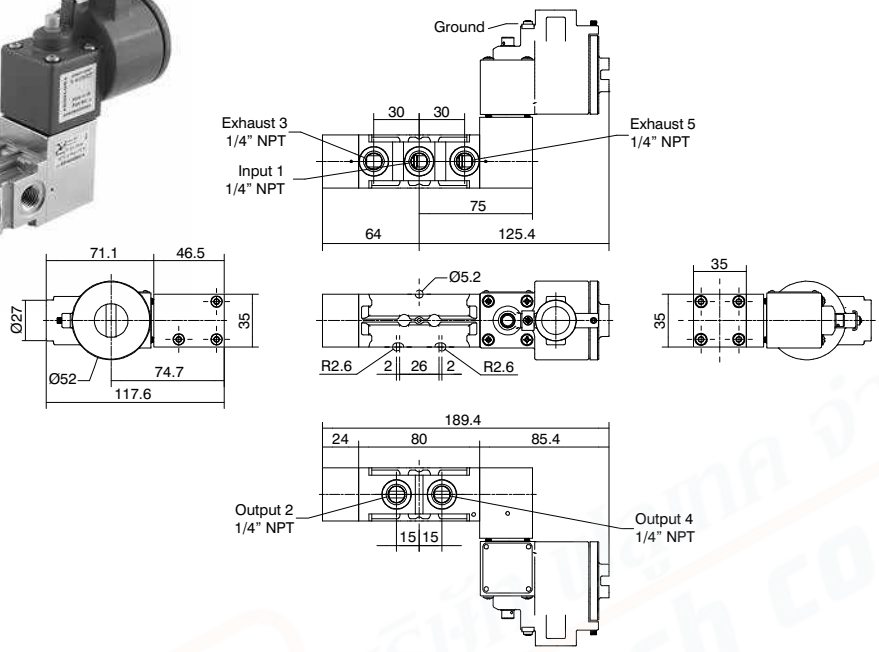

Minimum piloting pressure 2,5 bar
Fluid:
Filtered air. No lubrication needed, if applied it shall be continuous.
Inert Gas.
Sweet gas (natural).

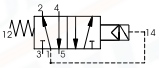

Operational characteristics					
Maximum working pressure (bar)	Flow rate at 6 bar with Δp=1 (Nl/min)	Connections	Weight (gr.)	Cv	kv
10	1000	1/4” NPT	1800	1,02	15,15

Solenoid-solenoid valve

Ordering code
SS14520BTBTL
TENSION
1 = 24 V DC
T 2 = 24 V AC (50/60 Hz)
3 = 110 V AC (50/60 Hz)
4 = 220 V AC (50/60 Hz)

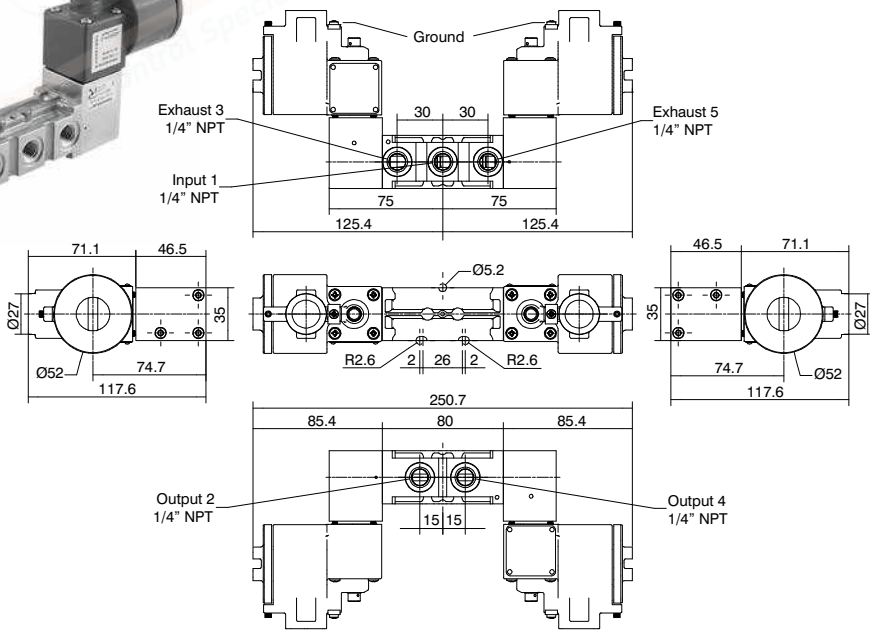

Minimum piloting pressure 2,5 bar
Fluid:
Filtered air. No lubrication needed, if applied it shall be continuous.
Inert Gas.
Sweet gas (natural).

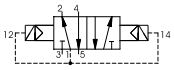

Operational characteristics					
Maximum working pressure (bar)	Flow rate at 6 bar with Δp=1 (Nl/min)	Connections	Weight (gr.)	Cv	kv
10	1000	1/4” NPT	2750	1,02	15,15

Solenoid valve with self-locking manual reset

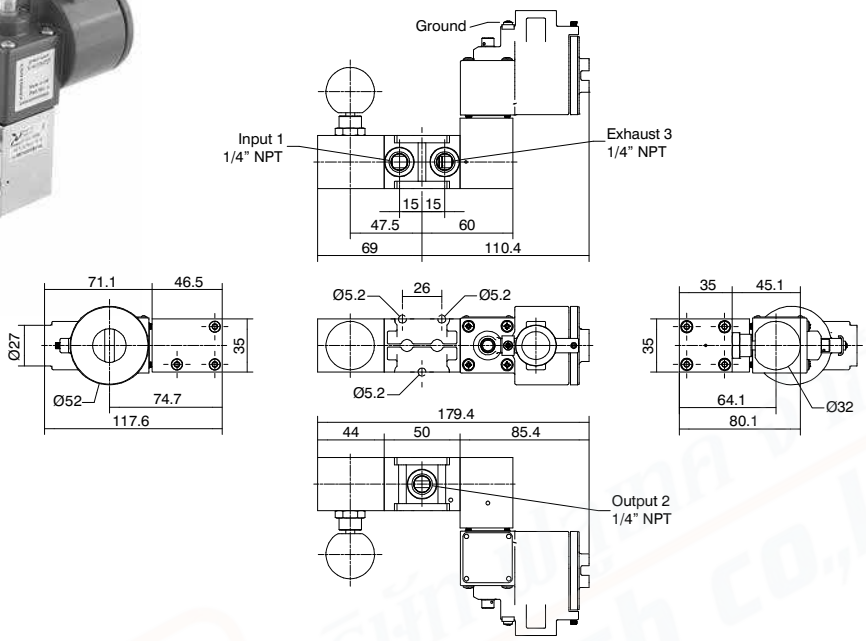

Ordering code
SS1432CBT14L
TENSION
1 = 24 V DC
T 2 = 24 V AC (50/60 Hz)
3 = 110 V AC (50/60 Hz)
4 = 220 V AC (50/60 Hz)

Minimum piloting pressure 2,5 bar
Fluid:
Filtered air. No lubrication needed, if applied it shall be continuous.
Inert Gas.
Sweet gas (natural).

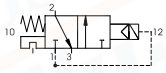

Operational characteristics					
Maximum working pressure (bar)	Flow rate at 6 bar with Δp=1 (Nl/min)	Connections	Weight (gr.)	Cv	kv
10	1000	1/4” NPT	1850	1,02	15,15

Solenoid valve with self-locking manual reset inverted

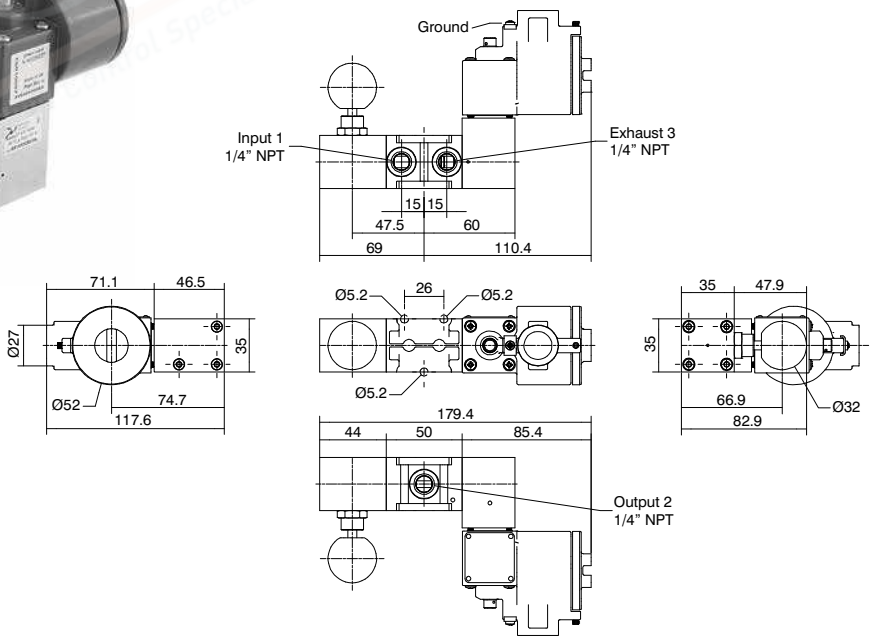

Ordering code
SS1432CBT15L
TENSION
1 = 24 V DC
T 2 = 24 V AC (50/60 Hz)
3 = 110 V AC (50/60 Hz)
4 = 220 V AC (50/60 Hz)

Minimum piloting pressure 2,5 bar
Fluid:
Filtered air. No lubrication needed, if applied it shall be continuous.
Inert Gas.
Sweet gas (natural).

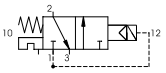

Operational characteristics					
Maximum working pressure (bar)	Flow rate at 6 bar with Δp=1 (Nl/min)	Connections	Weight (gr.)	Cv	kv
10	1000	1/4” NPT	1850	1,02	15,15

PROCESS AUTOMATION TECHNOLOGY

Solenoid valve with self-locking manual reset

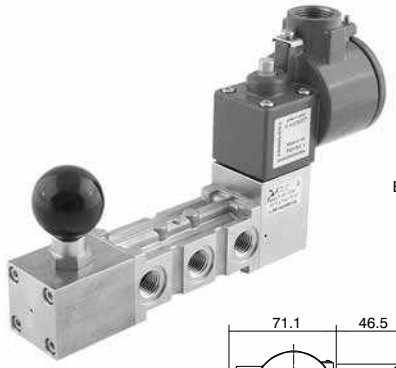

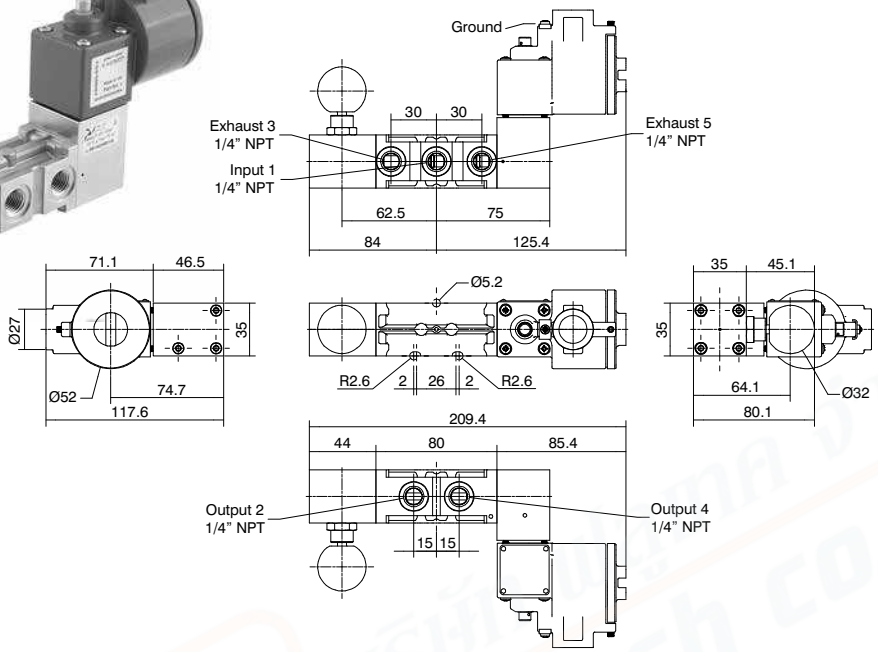

Ordering code
SS14520BT14L
TENSION
1 = 24 V DC
T 2 = 24 V AC (50/60 Hz)
3 = 110 V AC (50/60 Hz)
4 = 220 V AC (50/60 Hz)

Minimum piloting pressure 2,5 bar
Fluid:
Filtered air. No lubrication needed, if applied it shall be continuous.
Inert Gas.
Sweet gas (natural).

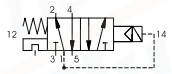

Operational characteristics					
Maximum working pressure (bar)	Flow rate at 6 bar with Δp=1 (Nl/min)	Connections	Weight (gr.)	Cv	kv
10	1000	1/4” NPT	2000	1,02	15,15

Solenoid valve with self-locking manual reset inverted

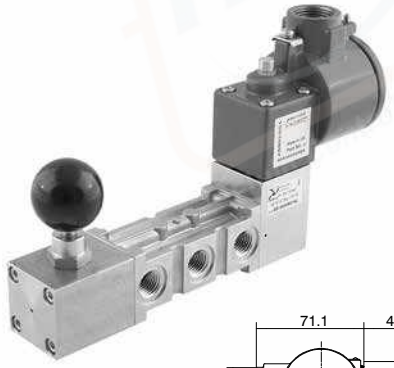

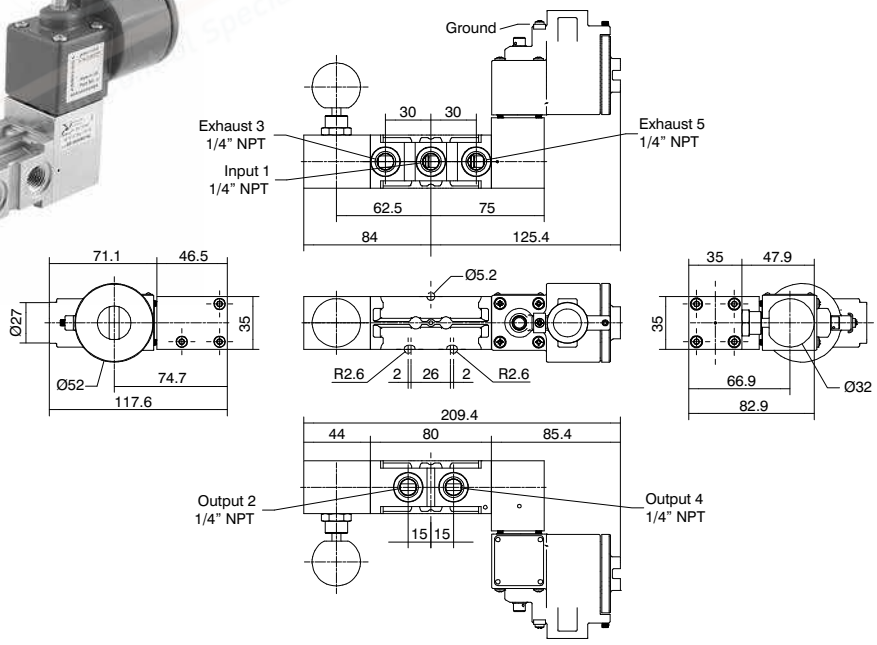

Ordering code
SS14520BT15L
TENSION
1 = 24 V DC
T 2 = 24 V AC (50/60 Hz)
3 = 110 V AC (50/60 Hz)
4 = 220 V AC (50/60 Hz)

Minimum piloting pressure 2,5 bar
Fluid:
Filtered air. No lubrication needed, if applied it shall be continuous.
Inert Gas.
Sweet gas (natural).

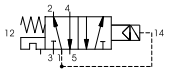

Operational characteristics					
Maximum working pressure (bar)	Flow rate at 6 bar with Δp=1 (Nl/min)	Connections	Weight (gr.)	Cv	kv
10	1000	1/4” NPT	2000	1,02	15,15

Solenoid valves 1/4” NPT series Steel line - Intrinsically safe Exia

Stainless steel solenoid valves, complete with intrinsically safe Exia rated solenoid coil in and CE marked have been engineered and developed to meet process automation and Oil & Gas severe service requirements, where material performances, product reliability and health and safety issues are critical elements. As a result, Pneumax products are perfectly suitable to work with sweet gas media and corrosive / aggressive gases.
All external and internal parts are AISI316L stainless steel material in compliance with NACE standard MR0175/ISO 15156-1.
The range includes solenoid valves with 3 and 5 ways functions, complete with self feeding solenoids, designed according to the following configuration:
- Solenoid-spring valve
- Solenoid-solenoid valve
- Solenoid valve with self-locking manual reset
- Solenoid valve with self-locking manual reset inverted.

Pneumax solenoid valves have 1/4” NPT connections with 1000Nl/min maximum flow rate.
Pneumax solenoid valve utmost adaptability represent one of the main features to provide customized solution and module assembly solution, since both single mounting and integrated module design are available; thanks to distinctive Pneumax valve body design.

Construction characteristics

Body	AISI 316L stainless steel
Operators	AISI 316L stainless steel
Spool	AISI 316L stainless steel
Spring	AISI 316 stainless steel
Screws	AISI 316 stainless steel (A4-70 stainless steel)
Seals	NBR for low temperatures FPM (Fluoroelastomer) (**available on request**)

Operating range

Fluid	Filtered air. No lubrication needed, if applied it shall be continuous. Inert Gas. Sweet gas (natural).
Operating temperature	-40°C ...+65°C

Note: The suitable operating temperature is limited by the most restrictive component, which is the pilot, regardless of the type of seals used in the valve spool.

Maximum operating pressure	10 bar

Electrical (Electropilot) construction characteristics

Housing	Zinc alloy with epoxy paint
Armour / Cores	Ferromagnetic stainless steel
Springs	Stainless steel
Seals	FPM (Fluoroelastomer)
Incorporation	PTB 30% glass load
Wire insulation	H
Guide tube	Stainless steel
Resistance	370 Ohms
Nominal voltage	24 V DC
Power consumption DC	0,4 W (Running)
Connection for cable entry	M20x1.5
Electrical connection	Screw terminals 2 Poles 2.5 mm
IP Rating	IP66
Tolerance on voltage supply	±10%
ED continuous service	100%

Electrical specifications for intrinsically safe

Umax: in	31 V DC
Imax:	0,67 A
Wmax: in	2,98 W

Certifications available:

ATEX CE Ex II 2 GD c IIC
: CE Ex **II 2G Ex h IIC Gb**
CE Ex **II 2D Ex h IIIC Db**

: International certification for explosive atmospheres

: Suitable up to SIL 3

: UL / CSA factory mutual approval

: CU - TR 012

ATEX, SIL and EAC Ex: refer to products in the various sections to the catalogues.
IECEx and FM: refer to Pneumatrol pilots installed upon each valve.

Solenoid-spring valve

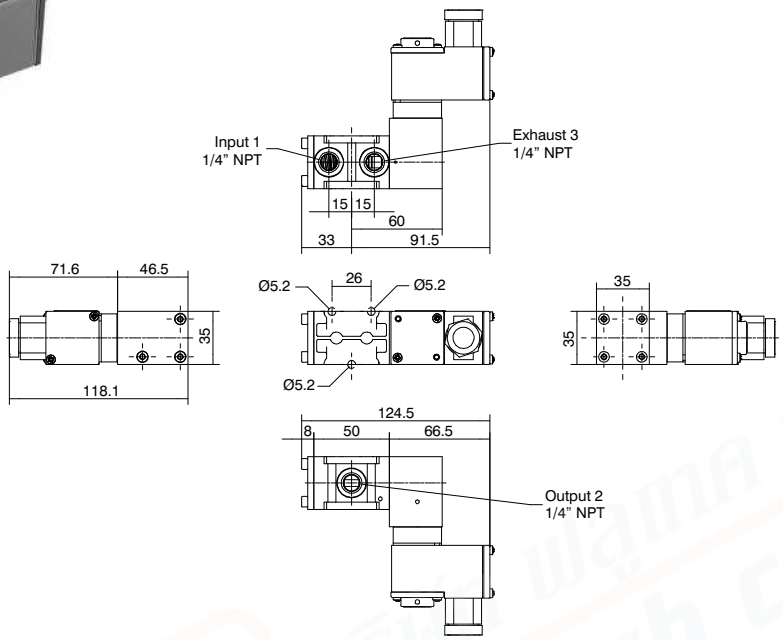

Ordering code
SS1432CCⓉ01L
Ⓣ TENSION 1 = 24 V DC 33 mA

Minimum piloting pressure 2,5 bar
Fluid:
Filtered air. No lubrication needed, if applied it shall be continuous.
Inert Gas.
Sweet gas (natural).

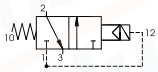

Operational characteristics

Maximum working pressure (bar)	Flow rate at 6 bar with Δp=1 (Nl/min)	Connections	Weight (gr.)	Cv	kv
10	1000	1/4" NPT	1200	1,02	15,15

Solenoid-solenoid valve

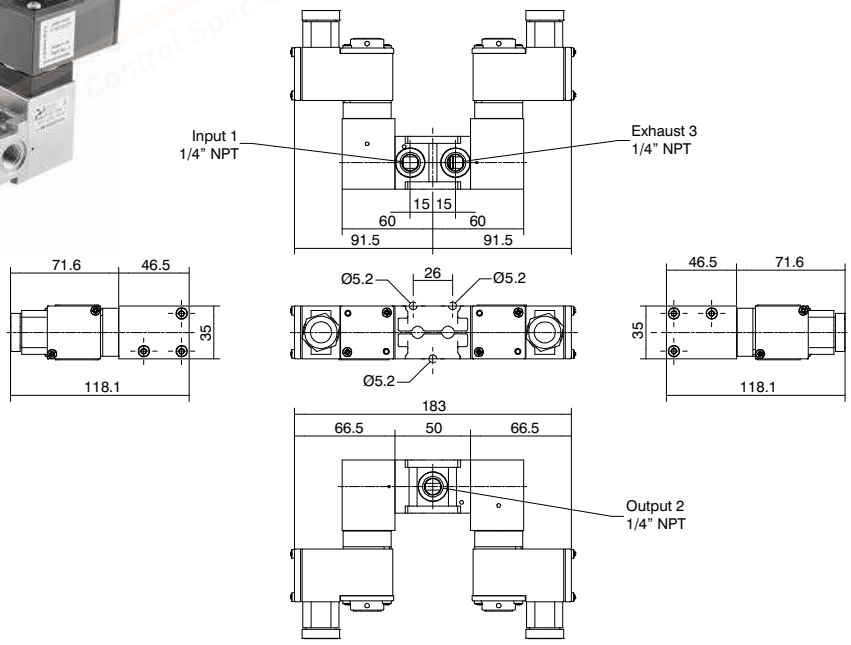

Ordering code
SS1432CCⓉCⓉL
Ⓣ TENSION 1 = 24 V DC 33 mA

Minimum piloting pressure 2,5 bar
Fluid:
Filtered air. No lubrication needed, if applied it shall be continuous.
Inert Gas.
Sweet gas (natural).

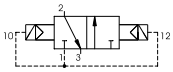

Operational characteristics

Maximum working pressure (bar)	Flow rate at 6 bar with Δp=1 (Nl/min)	Connections	Weight (gr.)	Cv	kv
10	1000	1/4" NPT	2300	1,02	15,15

Solenoid-spring valve

Ordering code
SS14520CT01L
T TENSION 1 = 24 V DC 33 mA

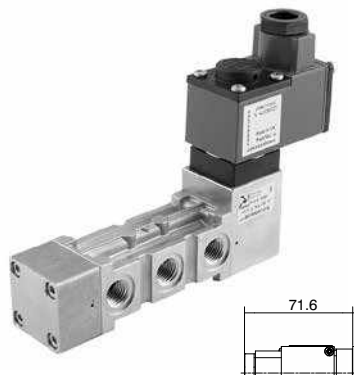

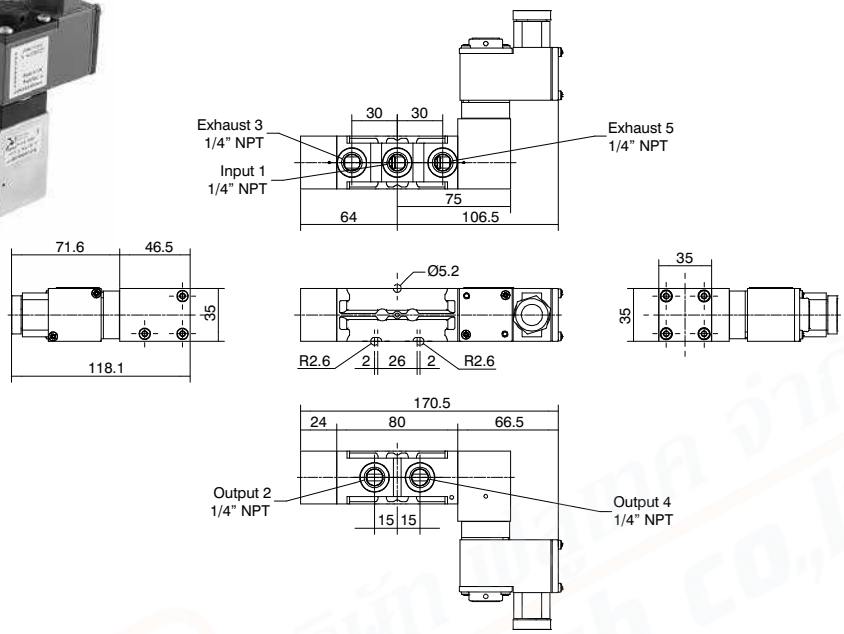

Minimum piloting pressure 2,5 bar
Fluid:
Filtered air. No lubrication needed, if applied it shall be continuous.
Inert Gas.
Sweet gas (natural).

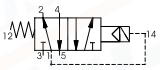

Operational characteristics					
Maximum working pressure (bar)	Flow rate at 6 bar with Δp=1 (Nl/min)	Connections	Weight (gr.)	Cv	kv
10	1000	1/4” NPT	1500	1,02	15,15

Solenoid-solenoid valve

Ordering code
SS14520CTCTL
T TENSION 1 = 24 V DC 33 mA

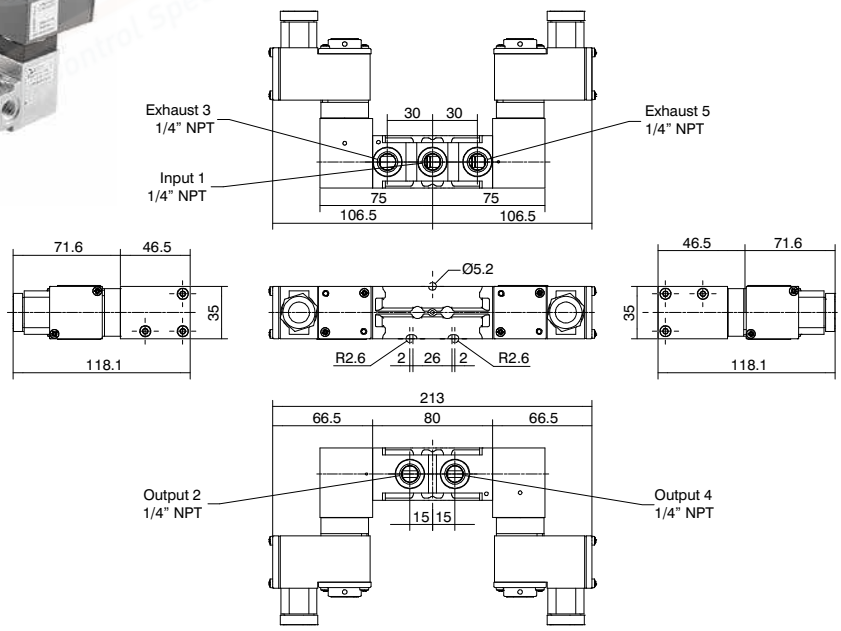

Minimum piloting pressure 2,5 bar
Fluid:
Filtered air. No lubrication needed, if applied it shall be continuous.
Inert Gas.
Sweet gas (natural).

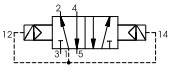

Operational characteristics					
Maximum working pressure (bar)	Flow rate at 6 bar with Δp=1 (Nl/min)	Connections	Weight (gr.)	Cv	kv
10	1000	1/4” NPT	2150	1,02	15,15

Solenoid valve with self-locking manual reset

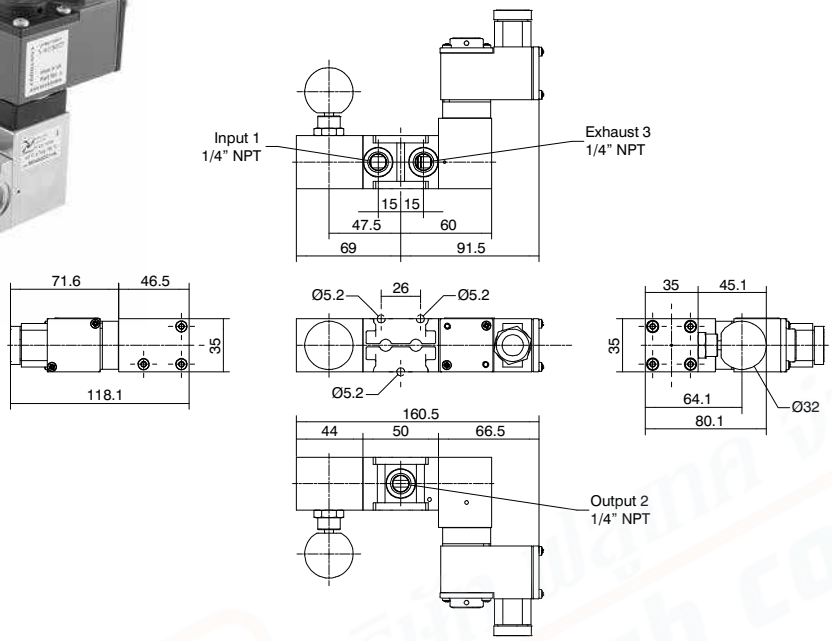

Ordering code
SS1432CCⓉ14L
Ⓣ TENSION 1 = 24 V DC 33 mA

Minimum piloting pressure 2,5 bar
Fluid:
Filtered air. No lubrication needed, if applied it shall be continuous.
Inert Gas.
Sweet gas (natural).

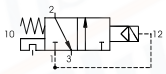

Operational characteristics					
Maximum working pressure (bar)	Flow rate at 6 bar with Δp=1 (Nl/min)	Connections	Weight (gr.)	Cv	kv
10	1000	1/4” NPT	1550	1,02	15,15

Solenoid valve with self-locking manual reset inverted

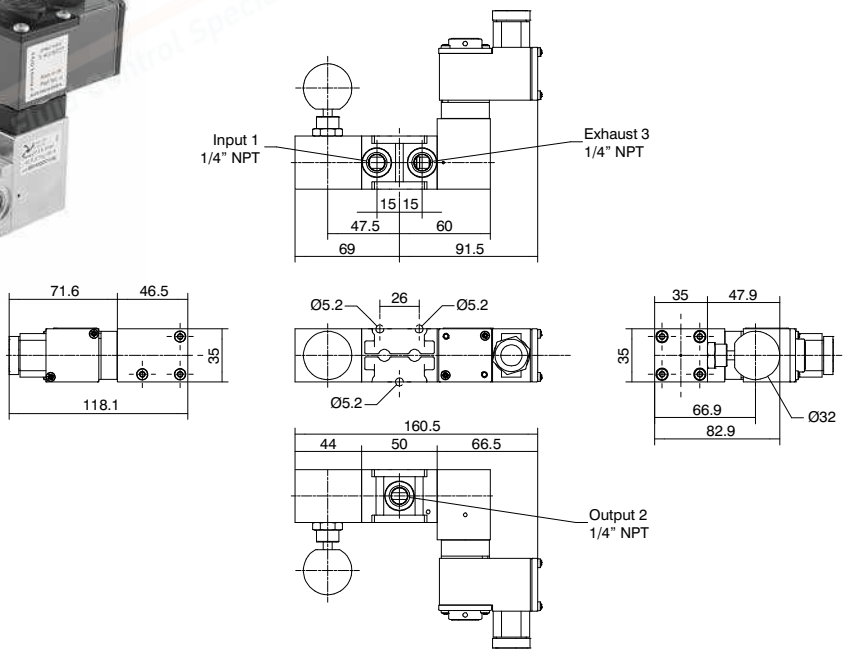

Ordering code
SS1432CCⓉ15L
Ⓣ TENSION 1 = 24 V DC 33 mA

Minimum piloting pressure 2,5 bar
Fluid:
Filtered air. No lubrication needed, if applied it shall be continuous.
Inert Gas.
Sweet gas (natural).

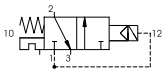

Operational characteristics					
Maximum working pressure (bar)	Flow rate at 6 bar with Δp=1 (Nl/min)	Connections	Weight (gr.)	Cv	kv
10	1000	1/4” NPT	1550	1,02	15,15

Solenoid valve with self-locking manual reset

Ordering code
SS14520CT14L
T TENSION 1 = 24 V DC 33 mA

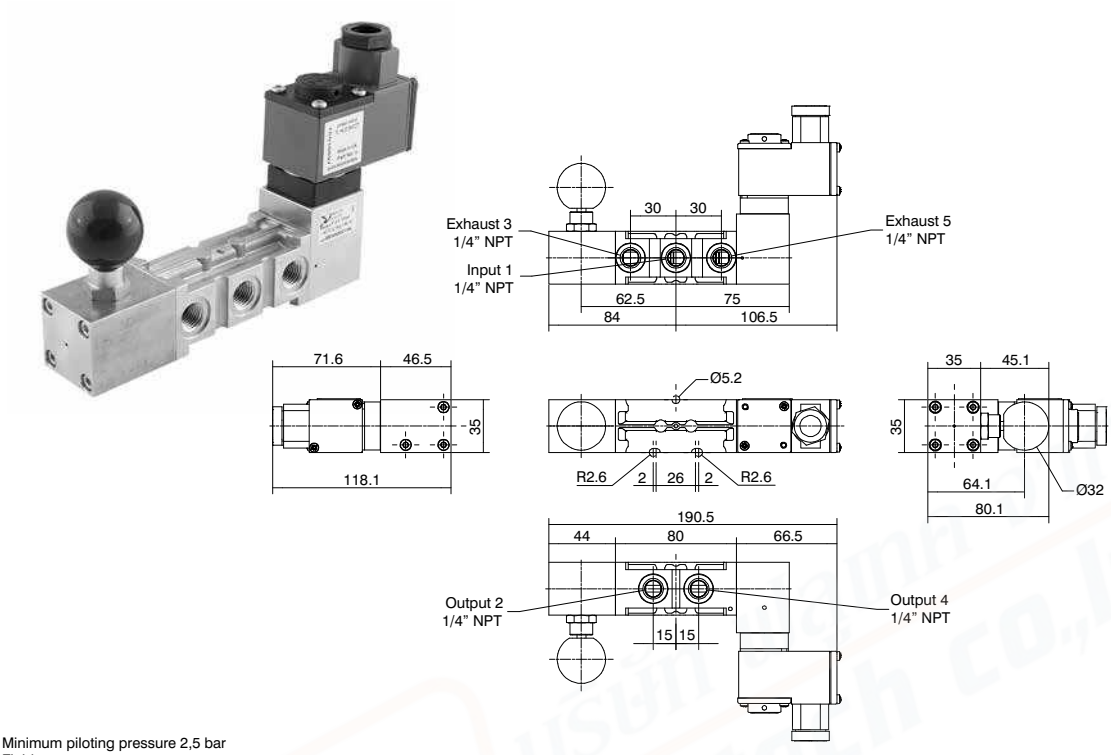

Minimum piloting pressure 2,5 bar
Fluid:
Filtered air. No lubrication needed, if applied it shall be continuous.
Inert Gas.
Sweet gas (natural).

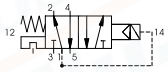

Operational characteristics					
Maximum working pressure (bar)	Flow rate at 6 bar with Δp=1 (Nl/min)	Connections	Weight (gr.)	Cv	kv
10	1000	1/4” NPT	1700	1,02	15,15

Solenoid valve with self-locking manual reset inverted

Ordering code
SS14520CT15L
T TENSION 1 = 24 V DC 33 mA

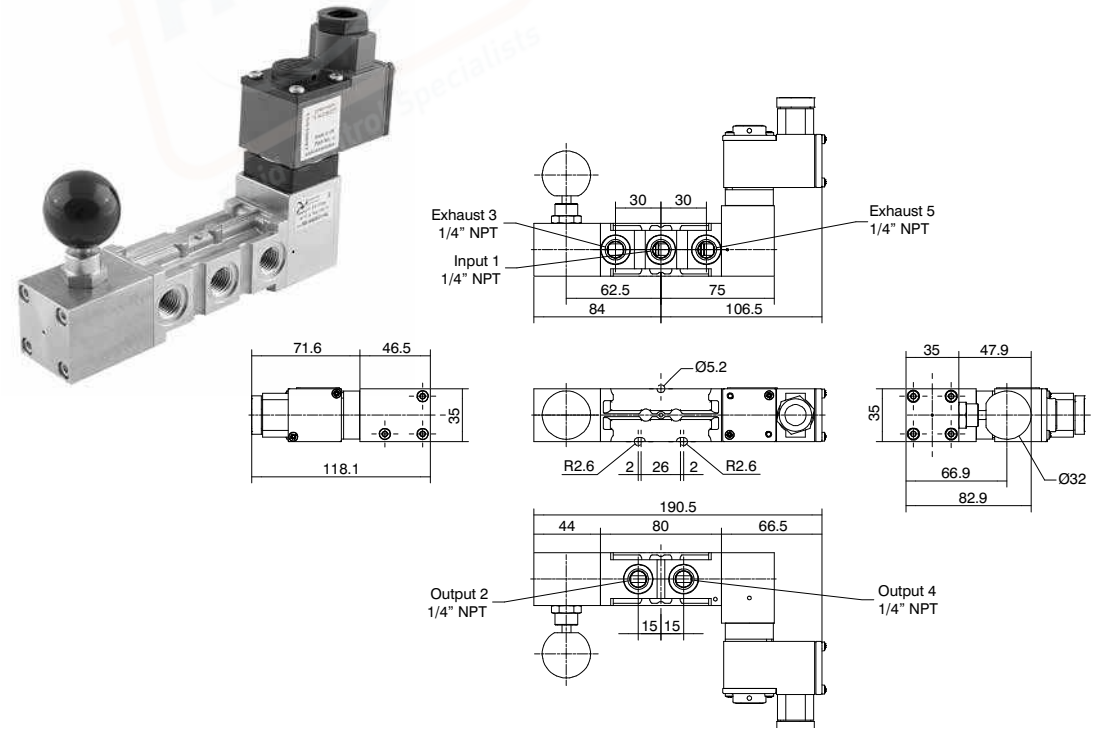

Minimum piloting pressure 2,5 bar
Fluid:
Filtered air. No lubrication needed, if applied it shall be continuous.
Inert Gas.
Sweet gas (natural).

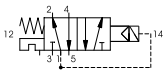

Operational characteristics					
Maximum working pressure (bar)	Flow rate at 6 bar with Δp=1 (Nl/min)	Connections	Weight (gr.)	Cv	kv
10	1000	1/4” NPT	1700	1,02	15,15

PROCESS AUTOMATION TECHNOLOGY

Flow divider, 2 outputs

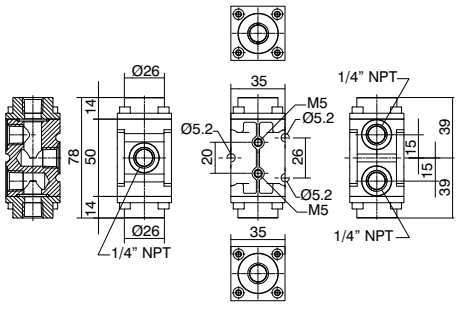

Different types of dividers available on request.

Ordering code

SS14T200T

T	TYPE
	L = Low temperature version
	H = High temperature version

Operational characteristics					
Maximum working pressure (bar)	Flow rate at 6 bar with Δp=1 (Nl/min)	Connections	Weight (gr.)	Cv	kv
12	1700	1/4" NPT	390	1,73	25,75

Flow regulator 1/4" NPT

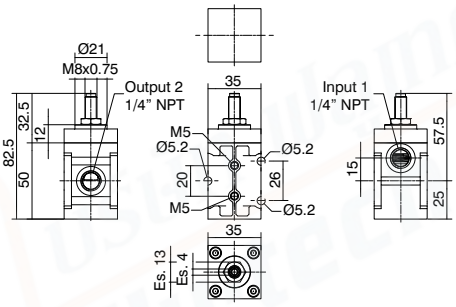

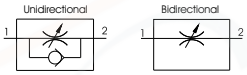

Ordering code

SS14RFFT

F	FUNCTION
	U = Unidirectional
	B = Bidirectional
T	TYPE
	L = Low temperature version
	H = High temperature version

Operational characteristics					
Maximum working pressure (bar)	Flow rate at 6 bar with Δp=1 (Nl/min)	Connections	Weight (gr.)	Cv	kv
12	1000	1/4" NPT	500	1,02	15,15

Non return valve

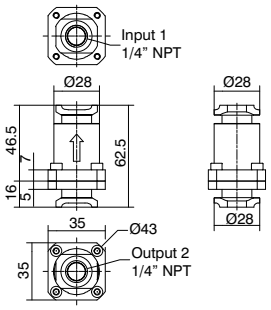

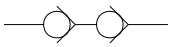

Ordering code

SS14VUST

T	TYPE
	L = Low temperature version
	H = High temperature version

Operational characteristics					
Maximum working pressure (bar)	Flow rate at 6 bar with Δp=1 (Nl/min)	Connections	Weight (gr.)	Cv	kv
12	1400	1/4" NPT	220	1,42	21,21

Non return valve for group

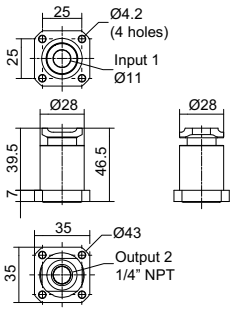

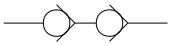

Ordering code

SS14VUGT

T	TYPE
	L = Low temperature version
	H = High temperature version

Operational characteristics					
Maximum working pressure (bar)	Flow rate at 6 bar with Δp=1 (Nl/min)	Connections	Weight (gr.)	Cv	kv
12	1400	1/4" NPT	150	1,42	21,21

Adapter for 90°

Ordering code
SS1490

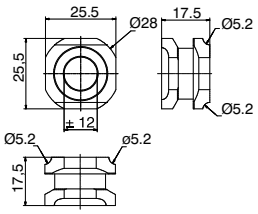

Operational characteristics
Weight (gr.)
45

Seal OR 2,62 x 13,95

Ordering code
SS14DⓉ
TYPE
Ⓣ L = Low temperature version
H = High temperature version

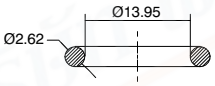

100-pieces pack.

Operational characteristics
Weight (gr.)
0,38

Mounting kit "A"

Ordering code
SS14A

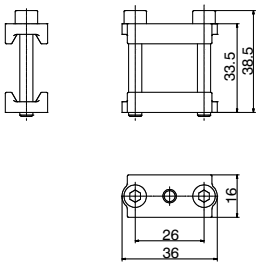

Kit includes:
Nr. 1 Front flange
Nr. 1 Thareaded rear flange
Nr. 2 Viti M5x35 AISI 316

Operational characteristics
Weight (gr.)
55

Mounting kit "B"

Ordering code
SS14B

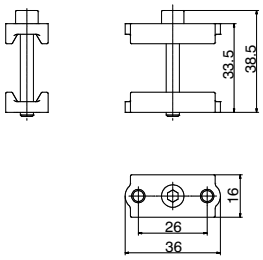

Kit includes:
Nr. 1 Front flange
Nr. 1 Thareaded rear flange
Nr. 1 Screw M5x35 AISI 316

Operational characteristics
Weight (gr.)
48

PROCESS AUTOMATION TECHNOLOGY

Single deployment flange

Ordering code
SS14C

Kit includes:
Nr. 1 Single deployment flange
Nr. 3 Screws M5x40 AISI 316
Nr. 2 Screws M5x8 AISI 316

Operational characteristics
Weight (gr.)
55

Fixing bracket

Ordering code
SS14M5

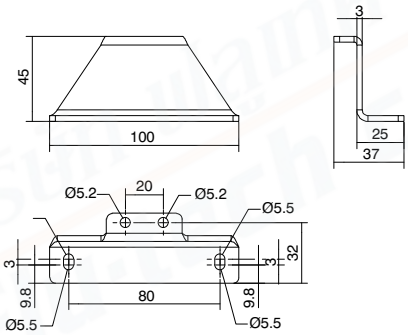

Kit includes:
Nr. 2 Screws M5x8 AISI 316
Nr. 1 Flange

Operational characteristics
Weight (gr.)
125

Example: manifold system

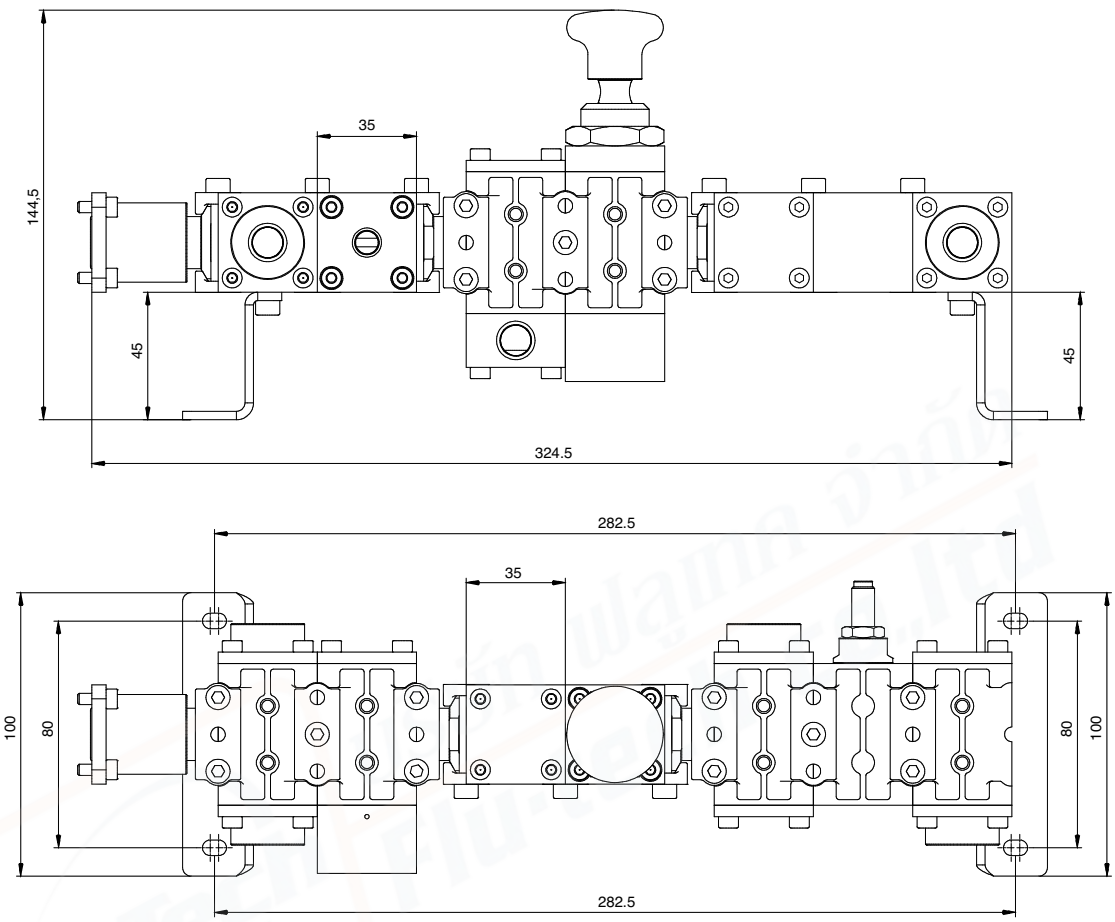

Example: group assembly scheme

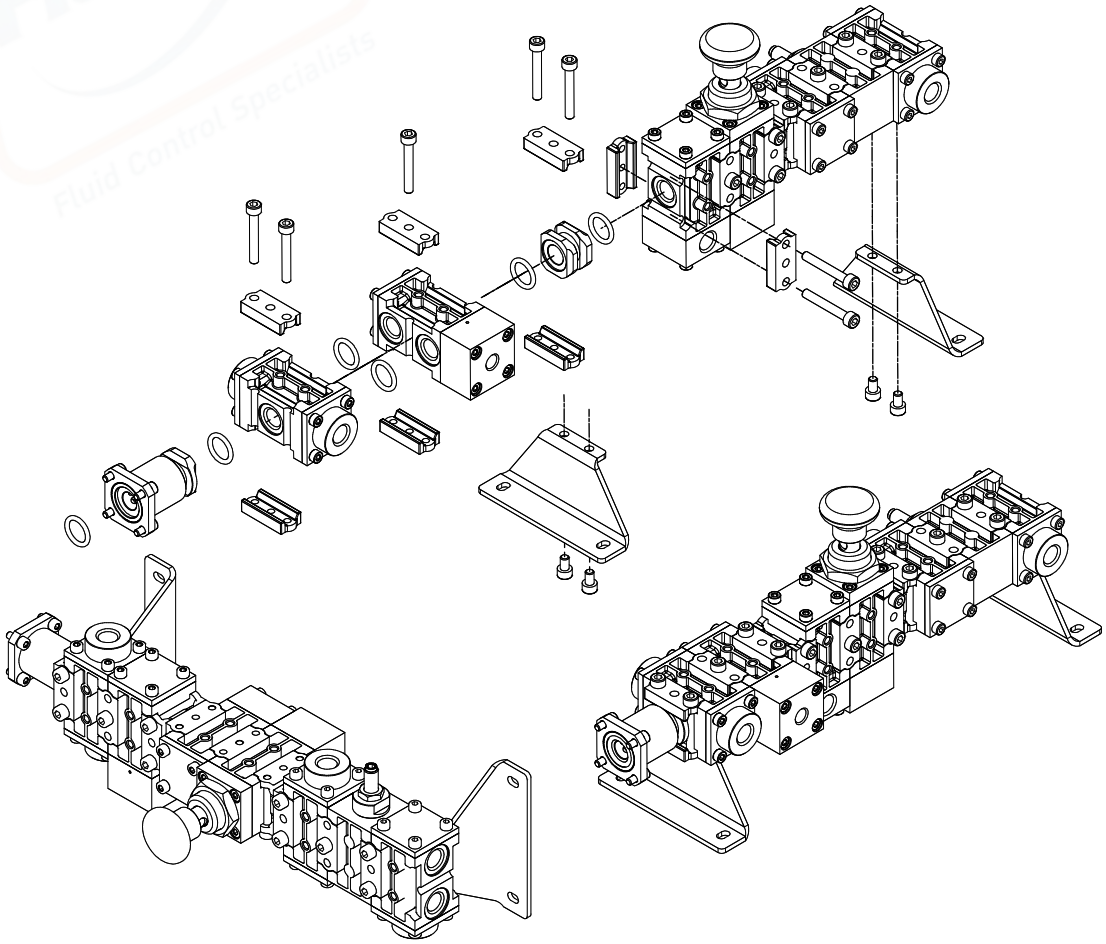

Valves 1/2” NPT series Steel line

Stainless steel brand series have been engineered and developed to meet process automation and Oil & Gas severe service requirements, where material performances, product reliability and health and safety issues are critical elements. As a result, Pneumax products are perfectly suitable to work with sweet gas media and corrosive / aggressive gases.

All external and internal parts are AISI316L stainless steel material in compliance with NACE standard MR0175/ISO 15156-1.

The range includes 3 and 5 ways valves, designed according to the following configuration:
- Pneumatic-spring valve
- Solenoid-solenoid valve
- 2 position push-pull valve
- Push button-spring valve
- Push button-pneumatic return valve
- Pneumatic valve with self-locking manual reset **(only in a 3 way function)**
- Pneumatic valve with self-locking manual reset inverted **(only in a 3 way function)**
- Accessories: Non return valve, Uni/bidirectional flow regulator and Quick exhaust valve.

Pneumax valves have 1/2” NPT connections with 3500Nl/min maximum flow rate.

This version only provides single mounting.

Construction characteristics

Body	AISI 316L stainless steel
Operators	AISI 316L stainless steel
Spool	AISI 316L stainless steel
Spring	AISI 316 stainless steel
Screws	AISI 316 stainless steel (A4-70 stainless steel)
Seals	FPM (Fluoroelastomer) NBR for low temperatures (-50°C) Standard

Operating range

Fluid	Filtered air. No lubrication needed, if applied it shall be continuous. Inert Gas. Sweet gas (natural).
Operating temperature (for low temperature version L)	-50°C ... +70°C
Operating temperature (for low temperature version H)	-10°C ... +150°C
Maximum operating pressure	12 bar

Certifications available:

ATEX CE Ex II 2 GD c IIC
: CE Ex **II 2G Ex h IIC Gb**
CE Ex **II 2D Ex h IIIC Db**

: Suitable up to SIL 3

: CU - TR 012

Pneumatic-spring valve

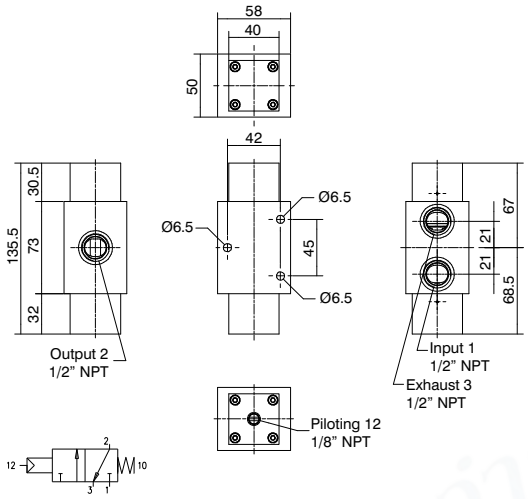

Minimum piloting pressure 3 bar
Fluid:
Filtered air. No lubrication needed, if applied it shall be continuous.
Inert Gas.
Sweet gas (natural).

Ordering code	
SS1232C1101T	
T	TYPE
	L = Low temperature version
	H = High temperature version

Operational characteristics						
Maximum working pressure (bar)	Flow rate at 6 bar with Δp=1 (Nl/min)	Connections	Pilot connections	Weight (gr.)	Cv	kv
12	3500	1/2” NPT	1/8” NPT	1992	3,55	53,03

Pneumatic-pneumatic valve

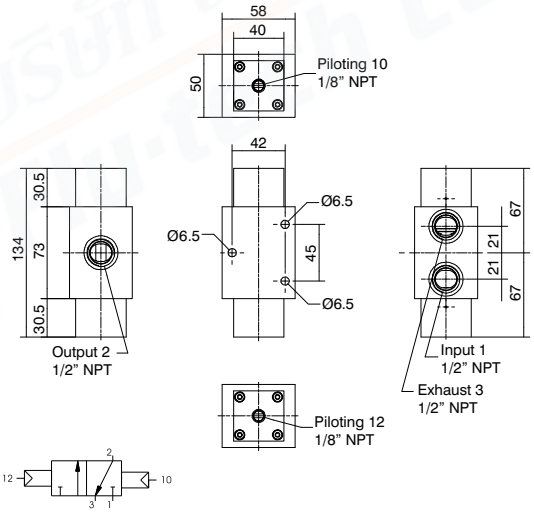

Minimum piloting pressure 3 bar
Fluid:
Filtered air. No lubrication needed, if applied it shall be continuous.
Inert Gas.
Sweet gas (natural).

Ordering code	
SS1232C1111T	
T	TYPE
	L = Low temperature version
	H = High temperature version

Operational characteristics						
Maximum working pressure (bar)	Flow rate at 6 bar with Δp=1 (Nl/min)	Connections	Pilot connections	Weight (gr.)	Cv	kv
12	3500	1/2” NPT	1/8” NPT	2001	3,55	53,03

2 position push-pull valve

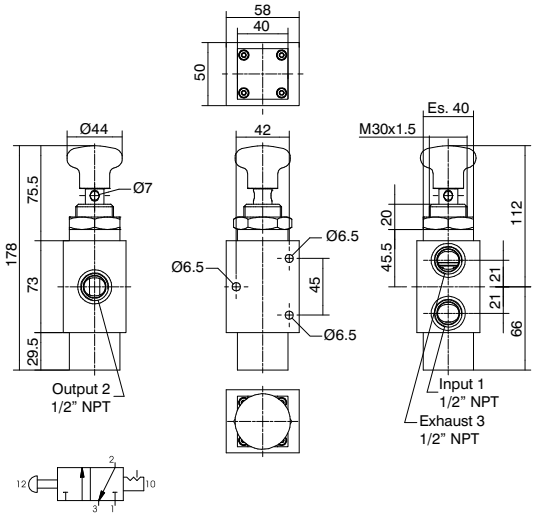

Actuation force 55N.
Fluid:
Filtered air. No lubrication needed, if applied it shall be continuous.
Inert Gas.
Sweet gas (natural).

Ordering code	
SS1232C0802T	
T	TYPE
	L = Low temperature version
	H = High temperature version

Operational characteristics					
Maximum working pressure (bar)	Flow rate at 6 bar with Δp=1 (Nl/min)	Connections	Weight (gr.)	Cv	kv
12	3500	1/2” NPT	2027	3,55	53,03

Push button-spring valve

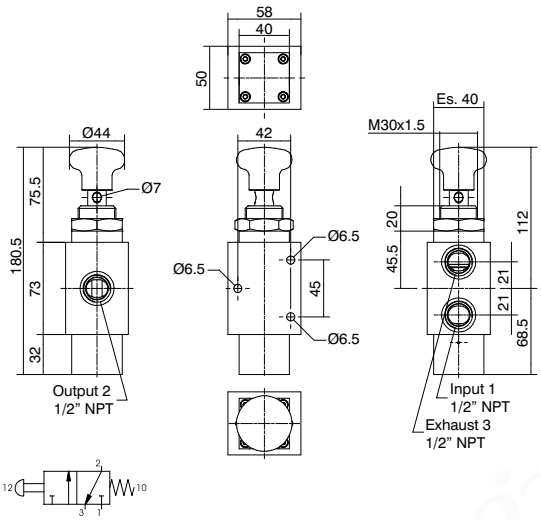

Ordering code

SS1232C0801T

T	TYPE
	L = Low temperature version
	H = High temperature version

Actuation force 200N
Fluid:
Filtered air. No lubrication needed, if applied it shall be continuous.
Inert Gas.
Sweet gas (natural).

Operational characteristics

Maximum working pressure (bar)	Flow rate at 6 bar with Δp=1 (Nl/min)	Connections	Weight (gr.)	Cv	kv
12	3500	1/2" NPT	2000	3,55	53,03

Push button-pneumatic return valve

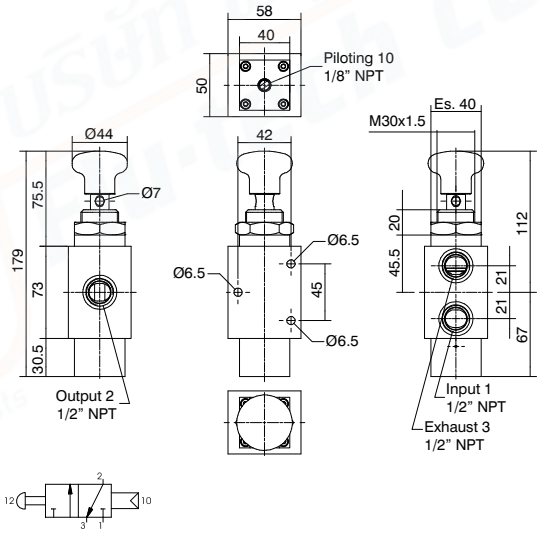

Ordering code

SS1232C0811T

T	TYPE
	L = Low temperature version
	H = High temperature version

Fluid:
Filtered air. No lubrication needed, if applied it shall be continuous.
Inert Gas.
Sweet gas (natural).

Operational characteristics

Maximum working pressure (bar)	Flow rate at 6 bar with Δp=1 (Nl/min)	Connections	Pilot connections	Weight (gr.)	Cv	kv
12	3500	1/2" NPT	1/8" NPT	2012	3,55	53,03

Pneumatic valve with self-locking manual reset

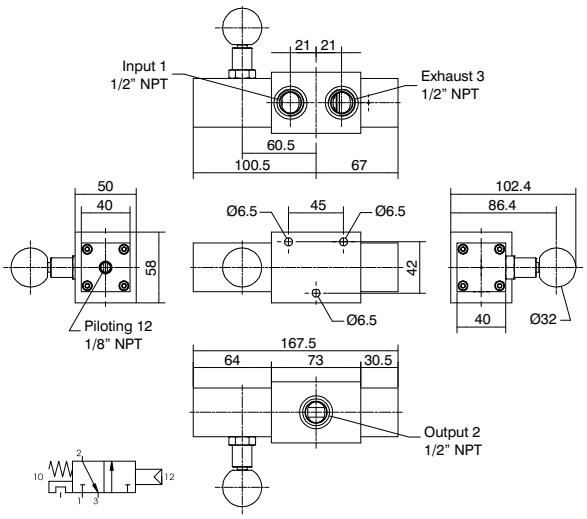

Ordering code

SS1232C1114T

T	TYPE
	L = Low temperature version
	H = High temperature version

Minimum piloting pressure 3 bar
Fluid:
Filtered air. No lubrication needed, if applied it shall be continuous.
Inert Gas.
Sweet gas (natural).

Operational characteristics

Maximum working pressure (bar)	Flow rate at 6 bar with Δp=1 (Nl/min)	Connections	Pilot connections	Weight (gr.)	Cv	kv
12	3500	1/2" NPT	1/8" NPT	2409	3,55	53,03

Pneumatic valve with self-locking manual reset inverted

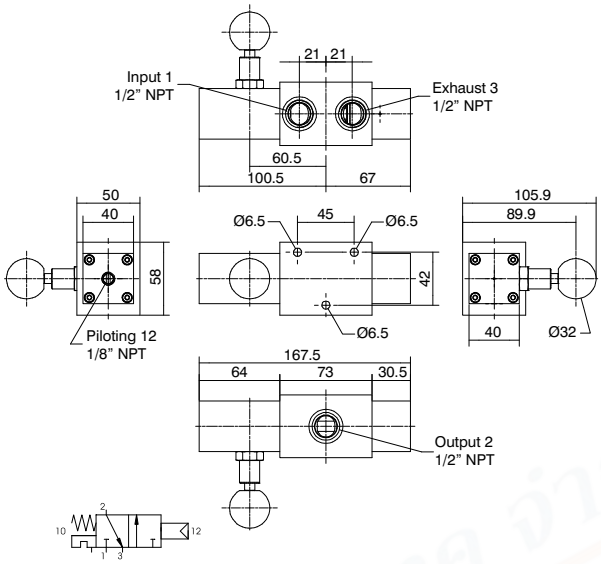

Ordering code
SS1232C1115T
TYPE
T L = Low temperature version
H = High temperature version

Minimum piloting pressure 3 bar
Fluid:
Filtered air. No lubrication needed, if applied it shall be continuous.
Inert Gas.
Sweet gas (natural).

Operational characteristics

Maximum working pressure (bar)	Flow rate at 6 bar with Δp=1 (Nl/min)	Connections	Pilot connections	Weight (gr.)	Cv	kv
12	3500	1/2” NPT	1/8” NPT	2408	3,55	53,03

บริษัท ฟลูเทค วาล์ว จำกัด
Flu-tech Co.,Ltd
Fluid Control Specialists

Pneumatic-spring valve

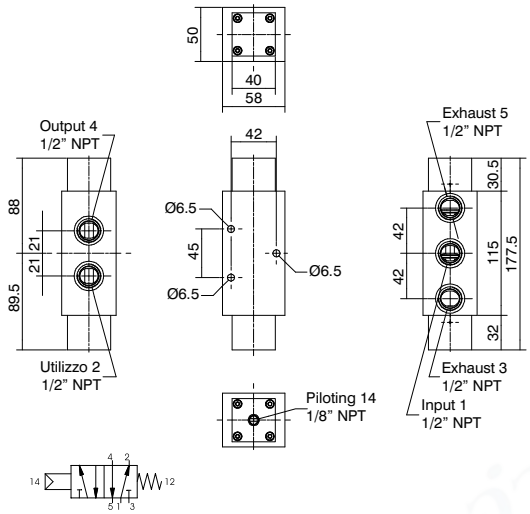

Minimum piloting pressure 3 bar
Fluid: Filtered air. No lubrication needed, if applied it shall be continuous.
Inert Gas.
Sweet gas (natural).

Ordering code
SS125201101T
TYPE
T L = Low temperature version
H = High temperature version

Operational characteristics

Maximum working pressure (bar)	Flow rate at 6 bar with Δp=1 (Nl/min)	Connections	Weight (gr.)	Cv	kv
12	3500	1/2" NPT	2744	3,55	53,03

Pneumatic-pneumatic valve

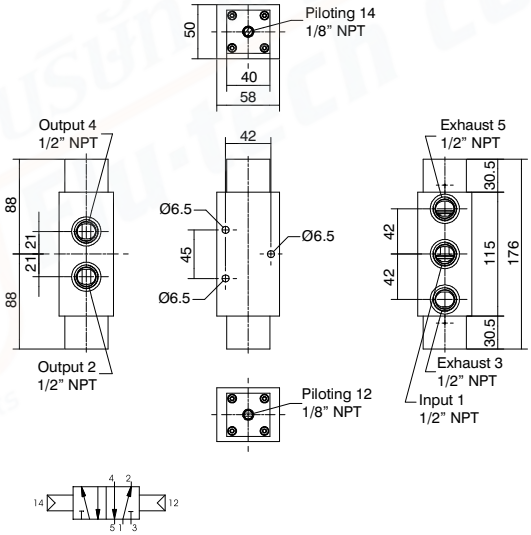

Minimum piloting pressure 3 bar
Fluid: Filtered air. No lubrication needed, if applied it shall be continuous.
Inert Gas.
Sweet gas (natural).

Ordering code
SS125201111T
TYPE
T L = Low temperature version
H = High temperature version

Operational characteristics

Maximum working pressure (bar)	Flow rate at 6 bar with Δp=1 (Nl/min)	Connections	Pilot connections	Weight (gr.)	Cv	kv
12	3500	1/2" NPT	1/8" NPT	2790	3,55	53,03

Pneumatic-pneumatic closed centers valve

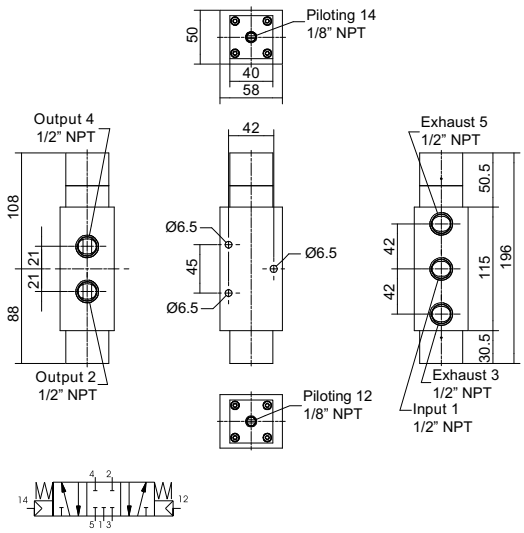

Minimum piloting pressure 3 bar
Fluid: Filtered air. No lubrication needed, if applied it shall be continuous.
Inert Gas.
Sweet gas (natural).

Ordering code
SS125311111T
TYPE
T L = Low temperature version
H = High temperature version

Operational characteristics

Maximum working pressure (bar)	Flow rate at 6 bar with Δp=1 (Nl/min)	Connections	Pilot connections	Weight (gr.)	Cv	kv
12	3500	1/2" NPT	1/8" NPT	3019	3,55	53,03

2 position push-pull valve

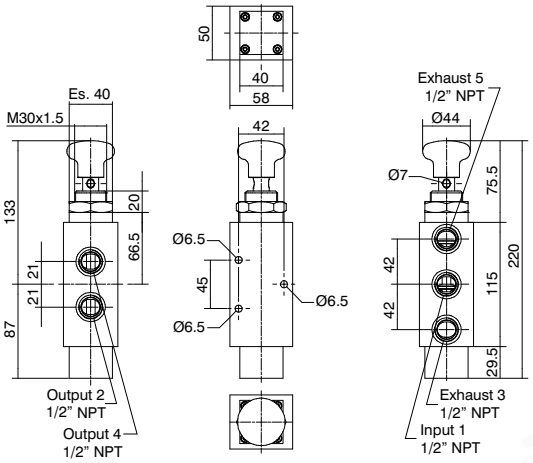

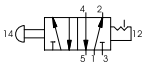

Actuation force 55N.
Fluid: Filtered air. No lubrication needed, if applied it shall be continuous.
Inert Gas.
Sweet gas (natural).

Ordering code
SS125200802T
TYPE
T L = Low temperature version
H = High temperature version

Operational characteristics

Maximum working pressure (bar)	Flow rate at 6 bar with Δp=1 (Nl/min)	Connections	Weight (gr.)	Cv	kv
12	3500	1/2” NPT	2757	3,55	53,03

Push button-spring valve

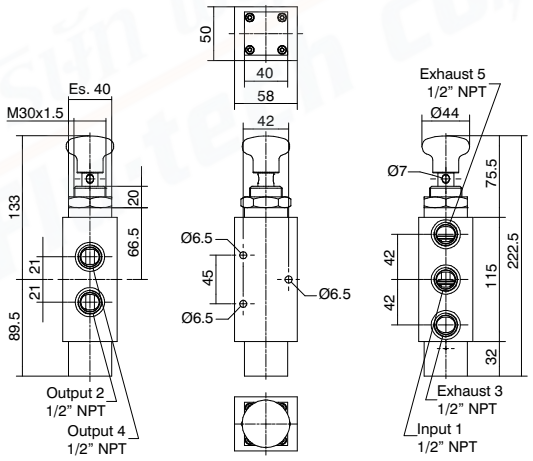

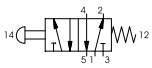

Actuation force 200N
Fluid: Filtered air. No lubrication needed, if applied it shall be continuous.
Inert Gas.
Sweet gas (natural).

Ordering code
SS125200801T
TYPE
T L = Low temperature version
H = High temperature version

Operational characteristics

Maximum working pressure (bar)	Flow rate at 6 bar with Δp=1 (Nl/min)	Connections	Weight (gr.)	Cv	kv
12	3500	1/2” NPT	2730	3,55	53,03

Push button-pneumatic return valve

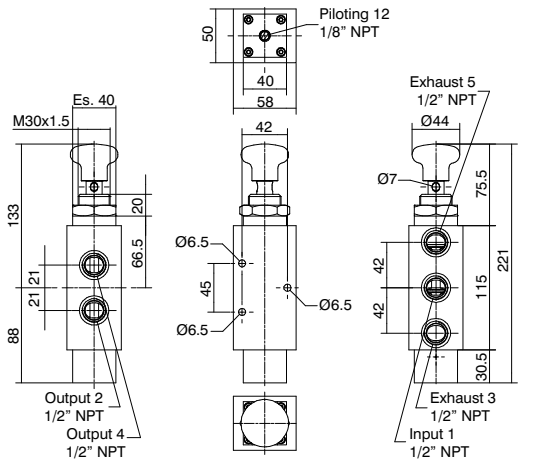

Minimum piloting pressure 3 bar
Fluid: Filtered air. No lubrication needed, if applied it shall be continuous.
Inert Gas.
Sweet gas (natural).

Ordering code
SS125200811T
TYPE
T L = Low temperature version
H = High temperature version

Operational characteristics

Maximum working pressure (bar)	Flow rate at 6 bar with Δp=1 (Nl/min)	Connections	Pilot connections	Weight (gr.)	Cv	kv
12	3500	1/2” NPT	1/8” NPT	2780	3,55	53,03

Solenoid valves 1/2” NPT series Steel line - For safe area with IP66 stainless steel housing

Stainless steel solenoid valves, complete with IP66 rated solenoid coil in a stainless steel housing and CE marked have been engineered and developed to meet process automation and Oil & Gas severe service requirements, where material performances, product reliability and health and safety issues are critical elements. As a result, Pneumax products are perfectly suitable to work with sweet gas media and corrosive / aggressive gases.

All external and internal parts are AISI316L stainless steel material in compliance with NACE standard MR0175/ISO 15156-1.

The range includes solenoid valves with 3 and 5 ways functions, complete with self feeding solenoids, designed according to the following configuration:
- Solenoid-spring valve
- Solenoid-solenoid valve
- Solenoid valve with self-locking manual reset **(only in a 3 way function)**.
- Solenoid valve with self-locking manual reset inverted **(only in a 3 way function)**.

Pneumax solenoid valves have 1/2” NPT connections with 3500Nl/min maximum flow rate.

Construction characteristics

Body	AISI 316L stainless steel
Operators	AISI 316L stainless steel
Spool	AISI 316L stainless steel
Spring	AISI 316 stainless steel
Screws	AISI 316 stainless steel (A4-70 stainless steel)
Seals	NBR for low temperatures FPM (Fluoroelastomer) (**available on request**)

Operating range

Fluid	Filtered air. No lubrication needed, if applied it shall be continuous. Inert Gas. Sweet gas (natural).
Operating temperature	-20°C ... +70°C
Note: The suitable operating temperature is limited by the most restrictive component, which is the pilot, regardless of the type of seals used in the valve spool.	
Maximum operating pressure	10 bar

Electrical (Electropilot) construction characteristics

Housing	304 stainless steel with epoxy paint
Armour / Cores	Ferromagnetic stainless steel
Springs	Stainless steel
Seals	FPM (Fluoroelastomer)
Incorporation	PTB 30% glass load
Wire insulation	H
Nominal voltage	24 V DC 24, 110, 220 V AC
Power consumption DC	2,4W
Power consumption AC	10VA (Inrush), 5VA (Running)
Connection for cable entry	M20x1.5 (1/2” NPT **available on request**)
Electrical connection	Screw terminals 2 Poles 2.5 mm
IP Rating	IP66
Tolerance on voltage supply	±10%
ED continuous service	100%

Certifications available:

Non ATEX marked product

SIL : Suitable up to SIL 3

EAC

Solenoid-spring valve

Ordering code
SS1232CA(T)01L
TENSION
1 = 24 V DC
(T) 2 = 24 V AC (50/60 Hz)
3 = 110 V AC (50/60 Hz)
4 = 220 V AC (50/60 Hz)

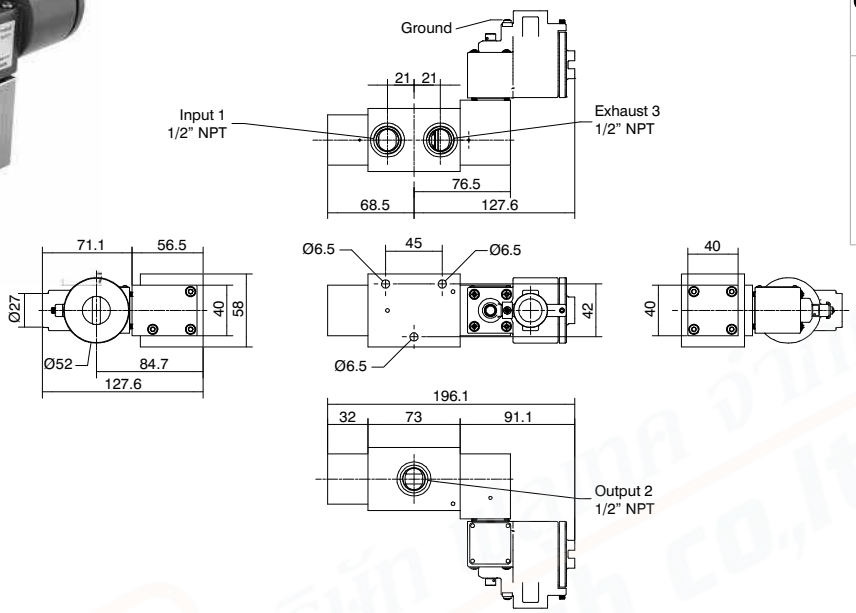

Minimum piloting pressure 3 bar
Fluid:
Filtered air. No lubrication needed, if applied it shall be continuous.
Inert Gas.
Sweet gas (natural).

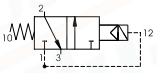

Operational characteristics					
Maximum working pressure (bar)	Flow rate at 6 bar with Δp=1 (Nl/min)	Connections	Weight (gr.)	Cv	kv
10	3500	1/2” NPT	2776	3,55	53,03

Solenoid-solenoid valve

Ordering code
SS1232CA(T)A(T)L
TENSION
1 = 24 V DC
(T) 2 = 24 V AC (50/60 Hz)
3 = 110 V AC (50/60 Hz)
4 = 220 V AC (50/60 Hz)

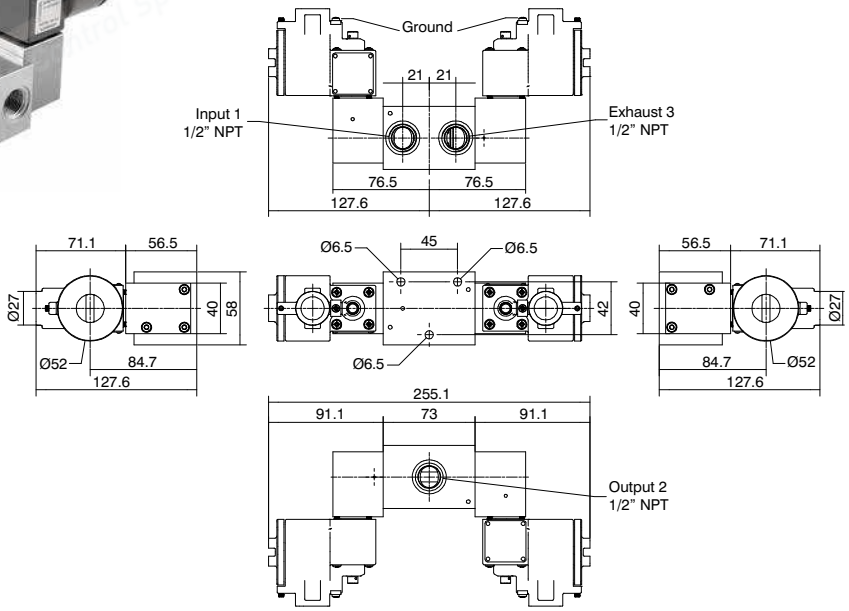

Minimum piloting pressure 3 bar
Fluid:
Filtered air. No lubrication needed, if applied it shall be continuous.
Inert Gas.
Sweet gas (natural).

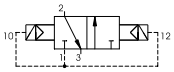

Operational characteristics					
Maximum working pressure (bar)	Flow rate at 6 bar with Δp=1 (Nl/min)	Connections	Weight (gr.)	Cv	kv
10	3500	1/2” NPT	3909	3,55	53,03

Solenoid-spring valve

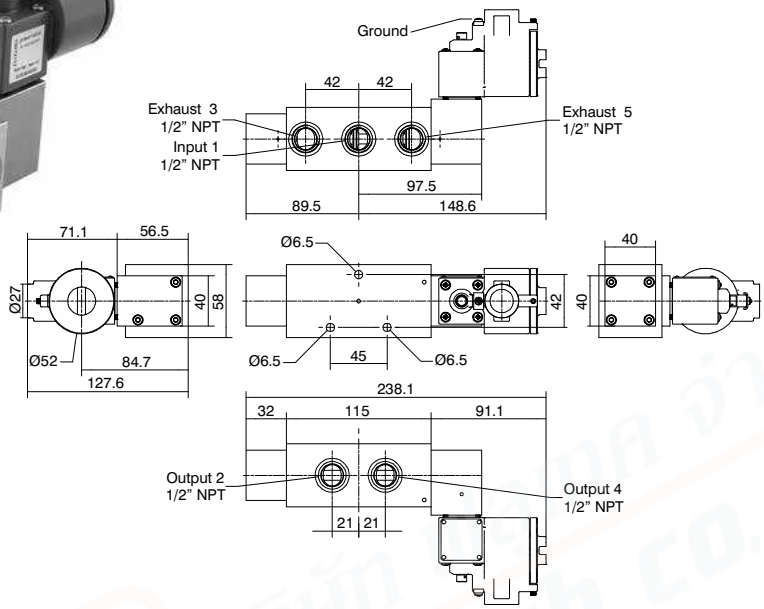

Ordering code
SS12520AT01L
TENSION
1 = 24 V DC
T 2 = 24 V AC (50/60 Hz)
3 = 110 V AC (50/60 Hz)
4 = 220 V AC (50/60 Hz)

Minimum piloting pressure 3 bar
Fluid:
Filtered air. No lubrication needed, if applied it shall be continuous.
Inert Gas.
Sweet gas (natural).

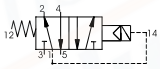

Operational characteristics					
Maximum working pressure (bar)	Flow rate at 6 bar with Δp=1 (Nl/min)	Connections	Weight (gr.)	Cv	kv
10	3500	1/2” NPT	3679	3,55	53,03

Solenoid-solenoid valve

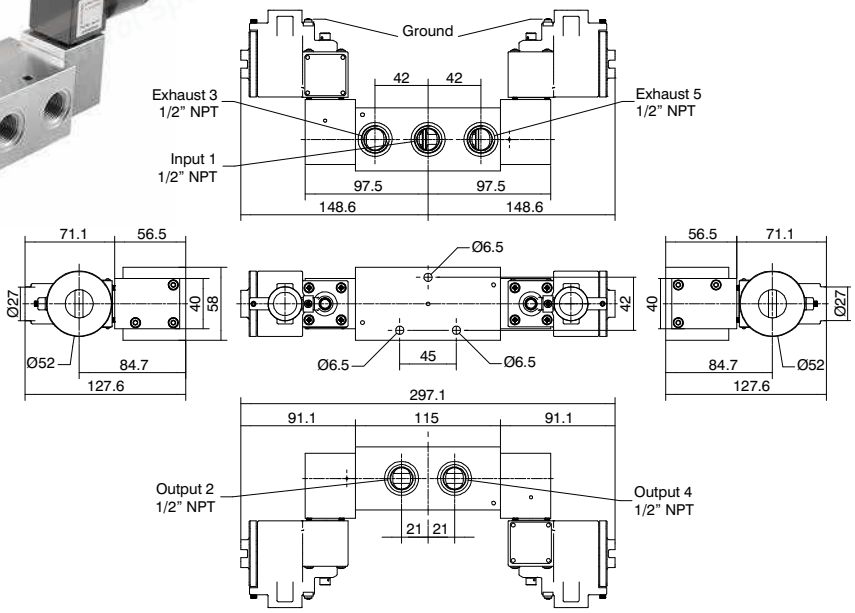

Ordering code
SS12520ATATL
TENSION
1 = 24 V DC
T 2 = 24 V AC (50/60 Hz)
3 = 110 V AC (50/60 Hz)
4 = 220 V AC (50/60 Hz)

Minimum piloting pressure 3 bar
Fluid:
Filtered air. No lubrication needed, if applied it shall be continuous.
Inert Gas.
Sweet gas (natural).

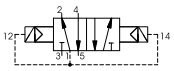

Operational characteristics					
Maximum working pressure (bar)	Flow rate at 6 bar with Δp=1 (Nl/min)	Connections	Weight (gr.)	Cv	kv
10	3500	1/2” NPT	4678	3,55	53,03

Solenoid valve with self-locking manual reset

Ordering code
SS1232CAT14L
TENSION
1 = 24 V DC
T 2 = 24 V AC (50/60 Hz)
3 = 110 V AC (50/60 Hz)
4 = 220 V AC (50/60 Hz)

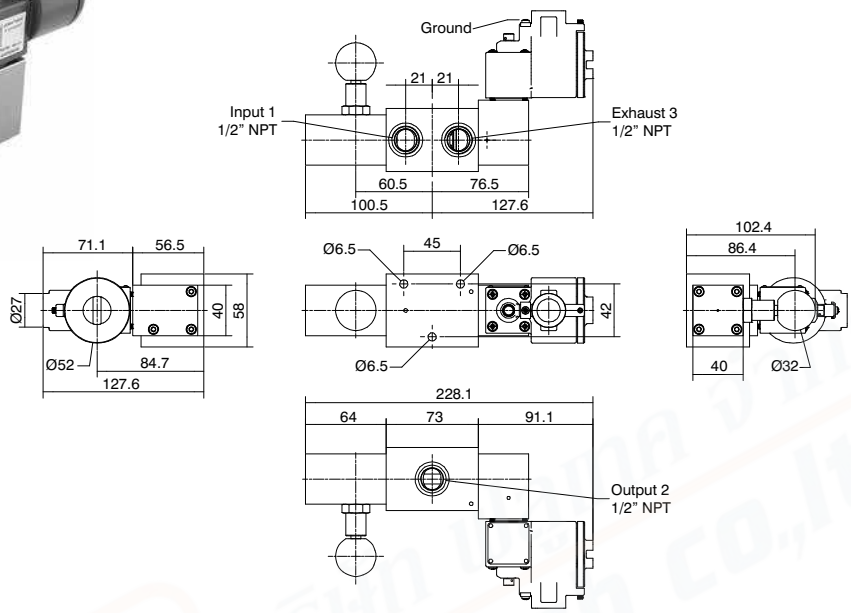

Minimum piloting pressure 3 bar
Fluid:
Filtered air. No lubrication needed, if applied it shall be continuous.
Inert Gas.
Sweet gas (natural).

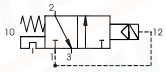

Operational characteristics					
Maximum working pressure (bar)	Flow rate at 6 bar with Δp=1 (Nl/min)	Connections	Weight (gr.)	Cv	kv
10	3500	1/2” NPT	3358	3,55	53,03

Solenoid valve with self-locking manual reset inverted

Ordering code
SS1232CAT15L
TENSION
1 = 24 V DC
T 2 = 24 V AC (50/60 Hz)
3 = 110 V AC (50/60 Hz)
4 = 220 V AC (50/60 Hz)

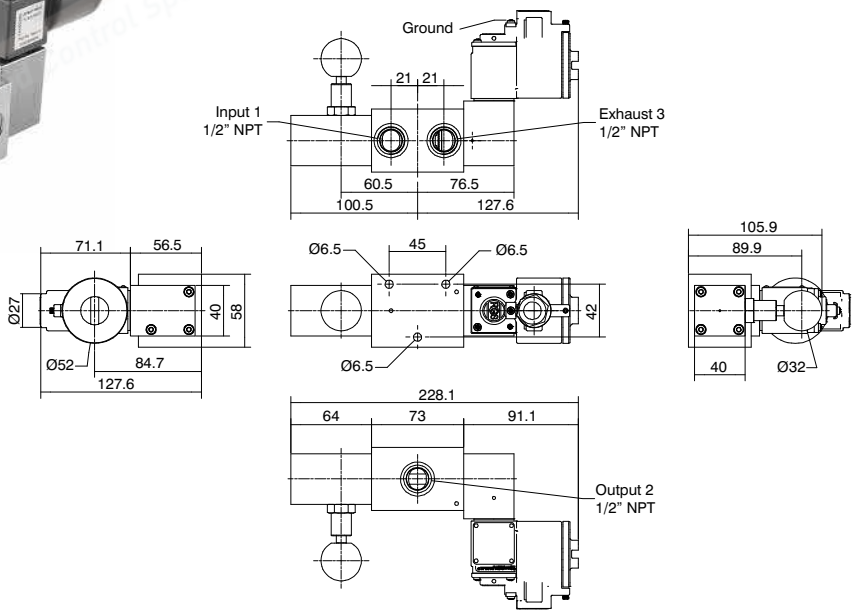

Minimum piloting pressure 3 bar
Fluid:
Filtered air. No lubrication needed, if applied it shall be continuous.
Inert Gas.
Sweet gas (natural).

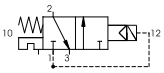

Operational characteristics					
Maximum working pressure (bar)	Flow rate at 6 bar with Δp=1 (Nl/min)	Connections	Weight (gr.)	Cv	kv
10	3500	1/2” NPT	3360	3,55	53,03

Solenoid valves 1/2” NPT series Steel line - IP66 Exd Explosion protection

Stainless steel solenoid valves, complete with IP66 Exd Explosion protection rated solenoid coil in a stainless steel housing andz CE marked have been engineered and developed to meet process automation and Oil & Gas severe service requirements, where material performances, product reliability and health and safety issues are critical elements. As a result, Pneumax products are perfectly suitable to work with sweet gas media and corrosive / aggressive gases.

All external and internal parts are AISI316L stainless steel material in compliance with NACE standard MR0175/ISO 15156-1.

The range includes solenoid valves with 3 and 5 ways functions, complete with self feeding solenoids, designed according to the following configuration:
- Solenoid-spring valve
- Solenoid-solenoid valve
- Solenoid valve with self-locking manual reset **(only in a 3 way function)**.
- Solenoid valve with self-locking manual reset inverted **(only in a 3 way function)**.

Pneumax solenoid valves have 1/2” NPT connections with 3500Nl/min maximum flow rate.

This version only provides single mounting.

Construction characteristics

Body	AISI 316L stainless steel
Operators	AISI 316L stainless steel
Spool	AISI 316L stainless steel
Spring	AISI 316 stainless steel
Screws	AISI 316 stainless steel (A4-70 stainless steel)
Seals	NBR for low temperatures FPM (Fluoroelastomer) (**available on request**)

Operating range

Fluid	Filtered air. No lubrication needed, if applied it shall be continuous. Inert Gas. Sweet gas (natural).
Operating temperature for DC version	-50°C ... +70°C
Operating temperature for AC version	-50°C ... +55°C
Maximum operating pressure	10 bar

Electrical (Electropilot) construction characteristics

Housing	304 stainless steel with epoxy paint
Armour / Cores	Ferromagnetic stainless steel
Springs	Stainless steel
Seals	FPM (Fluoroelastomer)
Incorporation	PTB 30% glass load
Wire insulation	H
Nominal voltage	24 V DC 24, 110, 220/230 V AC
Power consumption DC	3W
Power consumption AC	10VA (Inrush), 5VA (Running)
Connection for cable entry	M20x1.5 (1/2” NPT **available on request**)
Electrical connection	Screw terminals 2 Poles 2.5 mm
IP Rating	IP66
Tolerance on voltage supply	±10%
ED continuous service	100%

Certifications available:

ATEX CE Ex II 2 GD c IIC
: CE Ex **II 2G Ex h IIC Gb**
CE Ex **II 2D Ex h IIIC Db**

: International certification for explosive atmospheres

: Suitable up to SIL 3

: Nepsy approval - China

: CU - TR 012

ATEX, SIL and EAC Ex: refer to products in the various sections to the catalogues.
IECEx and NEPSI: refer to Pneumatrol pilots installed upon each valve.

Solenoid-spring valve

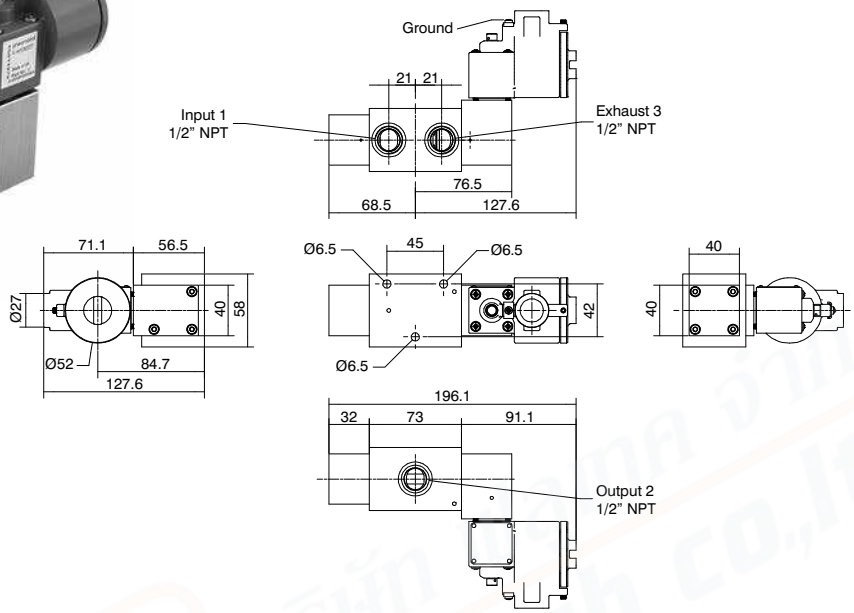

Ordering code
SS1232CBT01L
TENSION
1 = 24 V DC
T 2 = 24 V AC (50/60 Hz)
3 = 110 V AC (50/60 Hz)
4 = 220 V AC (50/60 Hz)

Minimum piloting pressure 3 bar
Fluid:
Filtered air. No lubrication needed, if applied it shall be continuous.
Inert Gas.
Sweet gas (natural).

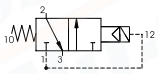

Operational characteristics					
Maximum working pressure (bar)	Flow rate at 6 bar with Δp=1 (Nl/min)	Connections	Weight (gr.)	Cv	kv
10	3500	1/2” NPT	2776	3,55	53,03

Solenoid-solenoid valve

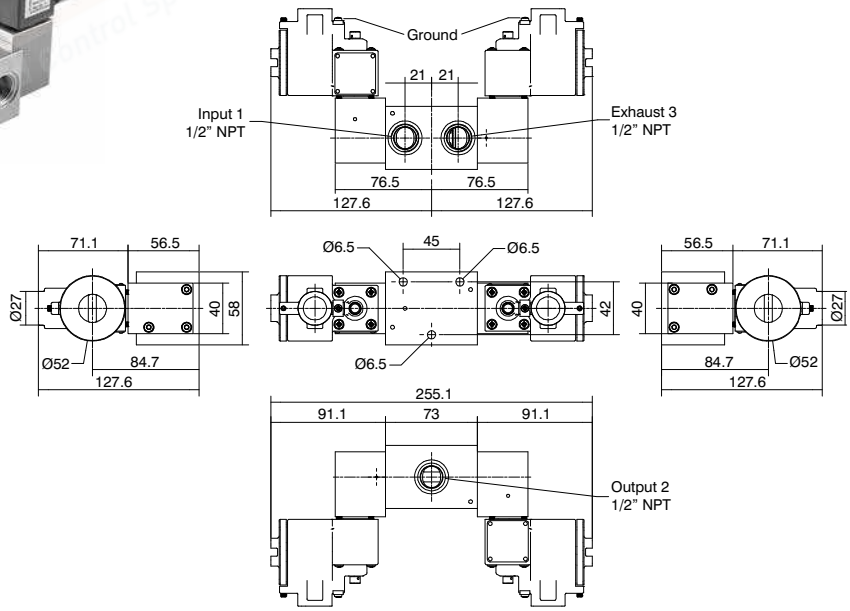

Ordering code
SS1232CBTBTL
TENSION
1 = 24 V DC
T 2 = 24 V AC (50/60 Hz)
3 = 110 V AC (50/60 Hz)
4 = 220 V AC (50/60 Hz)

Minimum piloting pressure 3 bar
Fluid:
Filtered air. No lubrication needed, if applied it shall be continuous.
Inert Gas.
Sweet gas (natural).

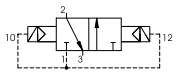

Operational characteristics					
Maximum working pressure (bar)	Flow rate at 6 bar with Δp=1 (Nl/min)	Connections	Weight (gr.)	Cv	kv
10	3500	1/2” NPT	3909	3,55	53,03

Solenoid-spring valve

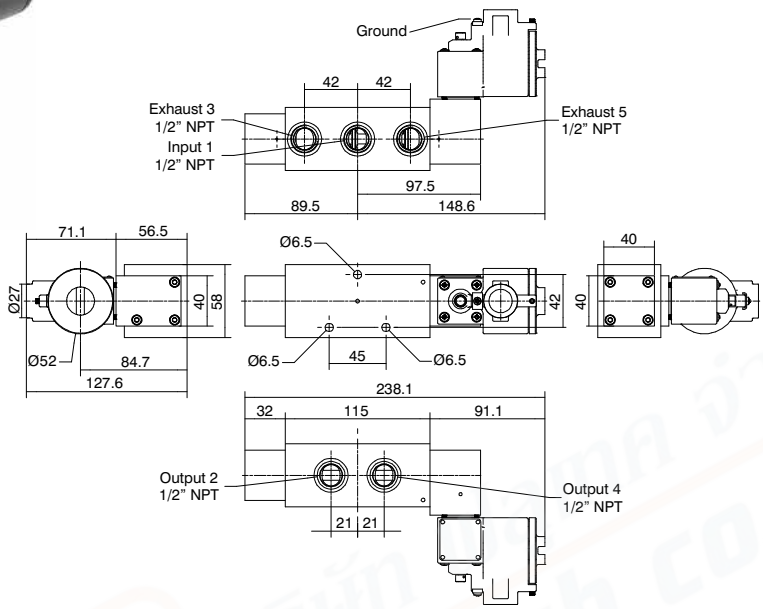

Ordering code
SS12520BT01L
TENSION
1 = 24 V DC
T 2 = 24 V AC (50/60 Hz)
3 = 110 V AC (50/60 Hz)
4 = 220 V AC (50/60 Hz)

Minimum piloting pressure 3 bar
Fluid:
Filtered air. No lubrication needed, if applied it shall be continuous.
Inert Gas.
Sweet gas (natural).

Operational characteristics					
Maximum working pressure (bar)	Flow rate at 6 bar with Δp=1 (Nl/min)	Connections	Weight (gr.)	Cv	kv
10	3500	1/2” NPT	3679	3,55	53,03

Solenoid-solenoid valve

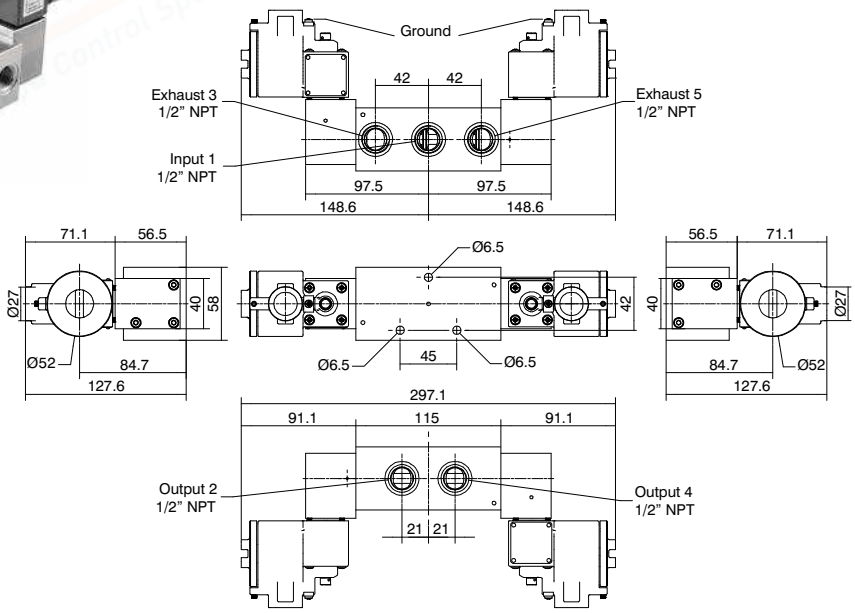

Ordering code
SS12520BTBTL
TENSION
1 = 24 V DC
T 2 = 24 V AC (50/60 Hz)
3 = 110 V AC (50/60 Hz)
4 = 220 V AC (50/60 Hz)

Minimum piloting pressure 3 bar
Fluid:
Filtered air. No lubrication needed, if applied it shall be continuous.
Inert Gas.
Sweet gas (natural).

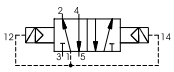

Operational characteristics					
Maximum working pressure (bar)	Flow rate at 6 bar with Δp=1 (Nl/min)	Connections	Weight (gr.)	Cv	kv
10	3500	1/2” NPT	4678	3,55	53,03

Solenoid valve with self-locking manual reset

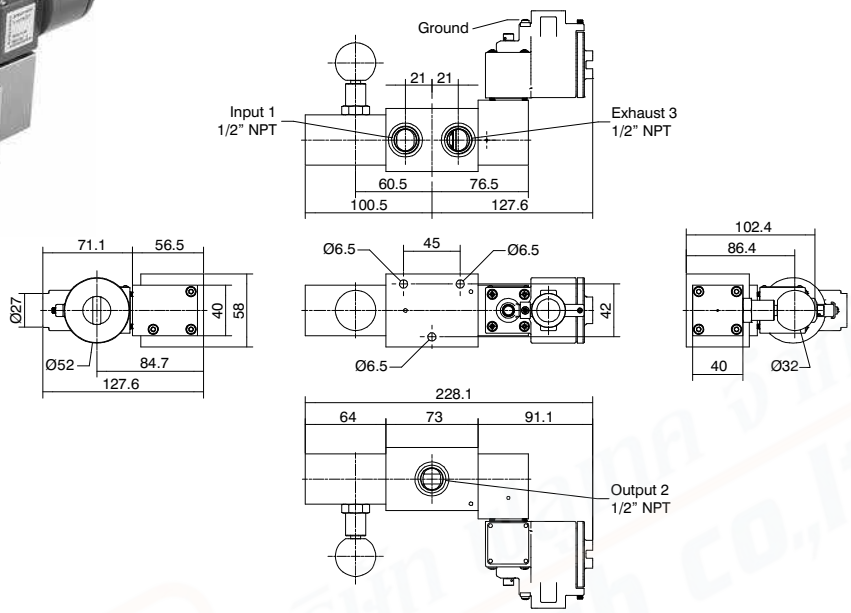

Ordering code
SS1232CBT14L
TENSION
1 = 24 V DC
T 2 = 24 V AC (50/60 Hz)
3 = 110 V AC (50/60 Hz)
4 = 220 V AC (50/60 Hz)

Minimum piloting pressure 3 bar
Fluid:
Filtered air. No lubrication needed, if applied it shall be continuous.
Inert Gas.
Sweet gas (natural).

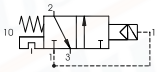

Operational characteristics					
Maximum working pressure (bar)	Flow rate at 6 bar with Δp=1 (Nl/min)	Connections	Weight (gr.)	Cv	kv
10	3500	1/2” NPT	3358	3,55	53,03

Solenoid valve with self-locking manual reset inverted

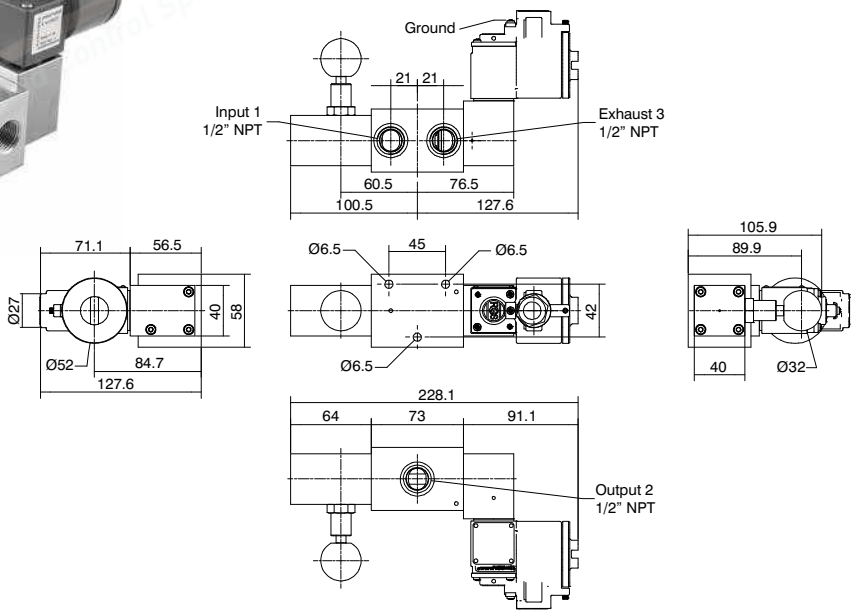

Ordering code
SS1232CBT15L
TENSION
1 = 24 V DC
T 2 = 24 V AC (50/60 Hz)
3 = 110 V AC (50/60 Hz)
4 = 220 V AC (50/60 Hz)

Minimum piloting pressure 3 bar
Fluid:
Filtered air. No lubrication needed, if applied it shall be continuous.
Inert Gas.
Sweet gas (natural).

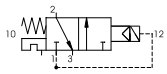

Operational characteristics					
Maximum working pressure (bar)	Flow rate at 6 bar with Δp=1 (Nl/min)	Connections	Weight (gr.)	Cv	kv
10	3500	1/2” NPT	3360	3,55	53,03

Solenoid valves 1/2” NPT series Steel line - Intrinsically safe Exia

Stainless steel solenoid valves, complete with intrinsically safe Exia rated solenoid coil in and CE marked have been engineered and developed to meet process automation and Oil & Gas severe service requirements, where material performances, product reliability and health and safety issues are critical elements. As a result, Pneumax products are perfectly suitable to work with sweet gas media and corrosive / aggressive gases.
All external and internal parts are AISI316L stainless steel material in compliance with NACE standard MR0175/ISO 15156-1.
The range includes solenoid valves with 3 and 5 ways functions, complete with self feeding solenoids, designed according to the following configuration:
- Solenoid-spring valve
- Solenoid-solenoid valve
- Solenoid valve with self-locking manual reset
- Solenoid valve with self-locking manual reset inverted.

Pneumax solenoid valves have 1/2” NPT connections with 3500Nl/min maximum flow rate.
This version only provides single mounting.

Construction characteristics

Body	AISI 316L stainless steel
Operators	AISI 316L stainless steel
Spool	AISI 316L stainless steel
Spring	AISI 316 stainless steel
Screws	AISI 316 stainless steel (A4-70 stainless steel)
Seals	NBR for low temperatures FPM (Fluoroelastomer) (**available on request**)

Operating range

Fluid	Filtered air. No lubrication needed, if applied it shall be continuous. Inert Gas. Sweet gas (natural).
Operating temperature	-40°C ... +65°C
Note: The suitable operating temperature is limited by the most restrictive component, which is the pilot, regardless of the type of seals used in the valve spool.	
Maximum operating pressure	10 bar

Electrical (Electropilot) construction characteristics

Housing	Zinc alloy with epoxy paint
Armour / Cores	Ferromagnetic stainless steel
Springs	Stainless steel
Seals	FPM (Fluoroelastomer)
Incorporation	PTB 30% glass load
Wire insulation	H
Guide tube	Stainless steel
Resistance	370 Ohms
Nominal voltage	24 V DC
Power consumption DC	0,4 W (Running)
Connection for cable entry	M20x1.5
Electrical connection	Screw terminals 2 Poles 2.5 mm
IP Rating	IP66
Tolerance on voltage supply	±10%
ED continuous service	100%

Electrical specifications for intrinsically safe

Umax: in	31 V DC
Imax:	0,67 A
Wmax: in	2,98 W

Certifications available:

ATEX CE Ex II 2 GD c IIC
: CE Ex **II 2G Ex h IIC Gb**
CE Ex **II 2D Ex h IIIC Db**

: International certification for explosive atmospheres

: Suitable up to SIL 3

: UL / CSA factory mutual approval

: CU - TR 012

ATEX, SIL and EAC Ex: refer to products in the various sections to the catalogues.
IECEx and FM: refer to Pneumatrol pilots installed upon each valve.

Solenoid-spring valve

Ordering code
SS1232CCT01L
T TENSION 1 = 24 V DC 33 mA

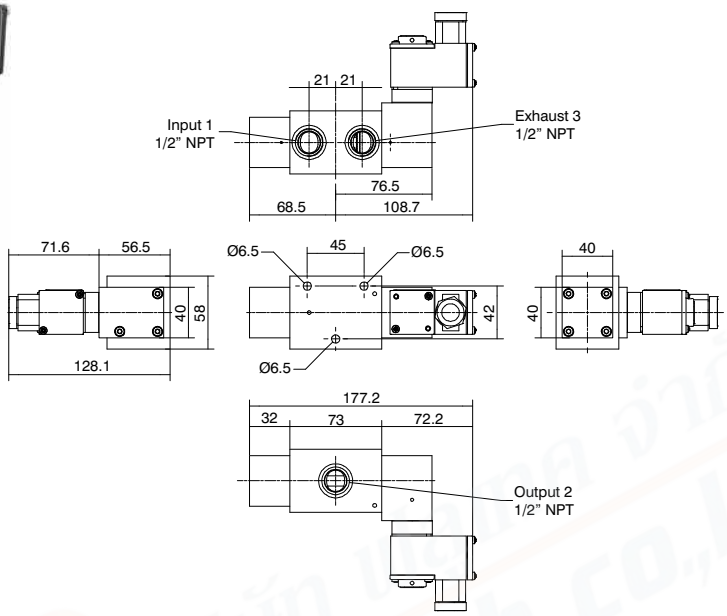

Minimum piloting pressure 3 bar
Fluid:
Filtered air. No lubrication needed, if applied it shall be continuous.
Inert Gas.
Sweet gas (natural).

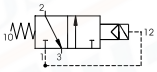

Operational characteristics					
Maximum working pressure (bar)	Flow rate at 6 bar with Δp=1 (Nl/min)	Connections	Weight (gr.)	Cv	kv
10	3500	1/2” NPT	2437	3,55	53,03

Solenoid-solenoid valve

Ordering code
SS1232CCTCTL
T TENSION 1 = 24 V DC 33 mA

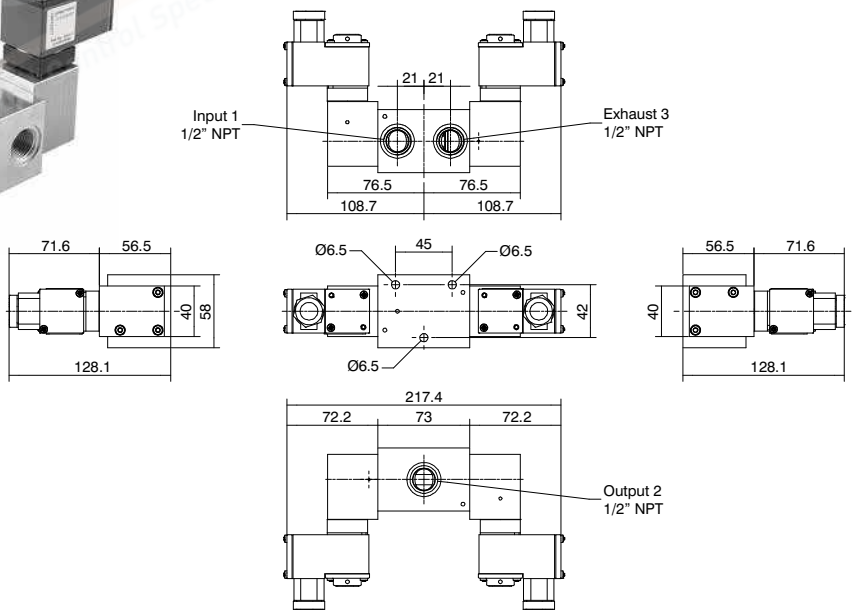

Minimum piloting pressure 3 bar
Fluid:
Filtered air. No lubrication needed, if applied it shall be continuous.
Inert Gas.
Sweet gas (natural).

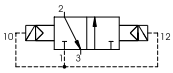

Operational characteristics					
Maximum working pressure (bar)	Flow rate at 6 bar with Δp=1 (Nl/min)	Connections	Weight (gr.)	Cv	kv
10	3500	1/2” NPT	3228	3,55	53,03

Solenoid-spring valve

Ordering code
SS12520CT01L
T TENSION 1 = 24 V DC 33 mA

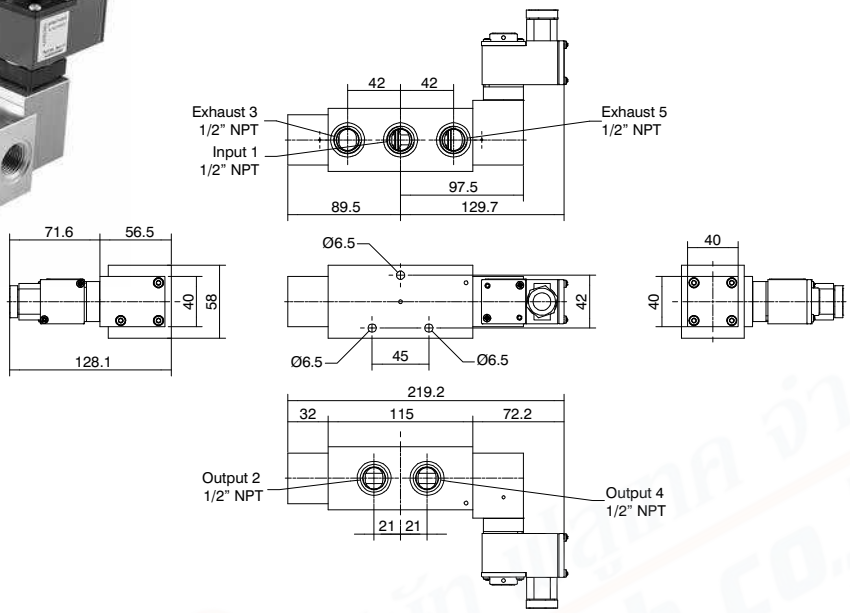

Minimum piloting pressure 3 bar
Fluid:
Filtered air. No lubrication needed, if applied it shall be continuous.
Inert Gas.
Sweet gas (natural).

Operational characteristics					
Maximum working pressure (bar)	Flow rate at 6 bar with Δp=1 (Nl/min)	Connections	Weight (gr.)	Cv	kv
10	3500	1/2” NPT	3349	3,55	53,03

Solenoid-solenoid valve

Ordering code
SS12520CTCTL
T TENSION 1 = 24 V DC 33 mA

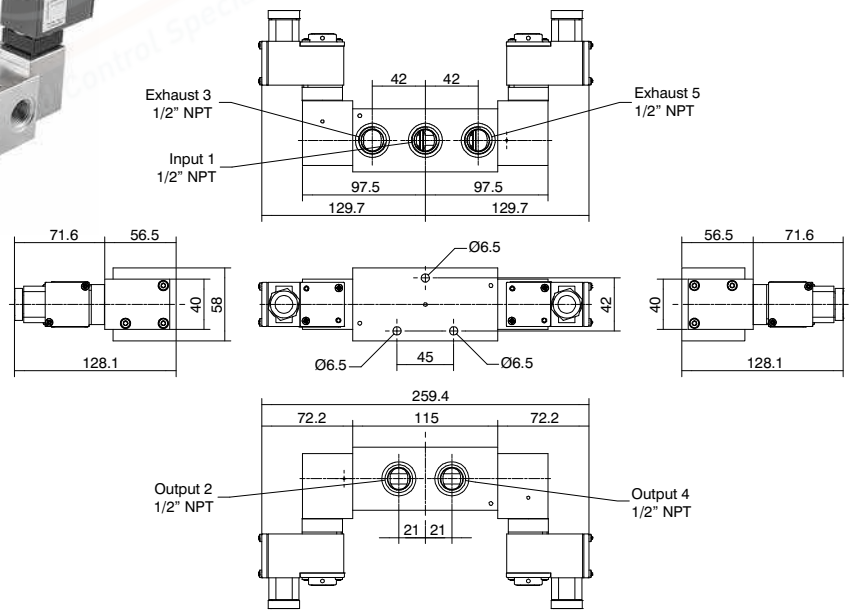

Minimum piloting pressure 3 bar
Fluid:
Filtered air. No lubrication needed, if applied it shall be continuous.
Inert Gas.
Sweet gas (natural).

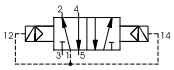

Operational characteristics					
Maximum working pressure (bar)	Flow rate at 6 bar with Δp=1 (Nl/min)	Connections	Weight (gr.)	Cv	kv
10	3500	1/2” NPT	3749	3,55	53,03

Solenoid valve with self-locking manual reset

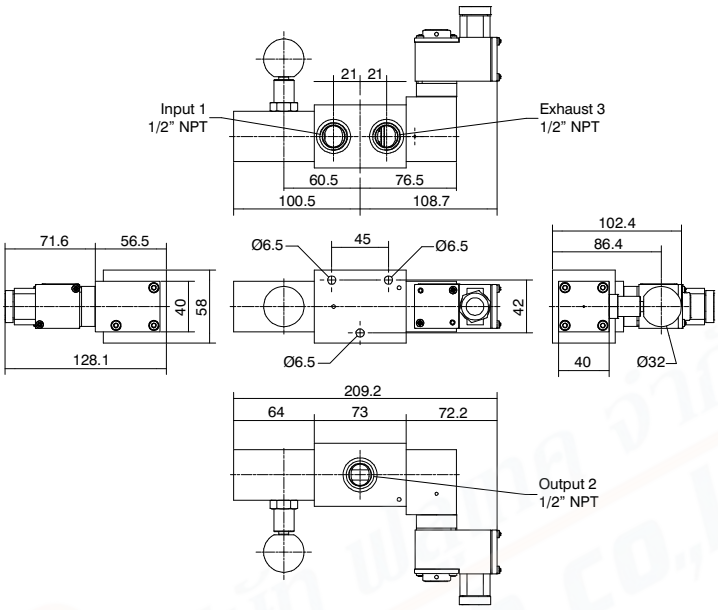

Ordering code
SS1232CCT14L
T TENSION 1 = 24 V DC 33 mA

Minimum piloting pressure 3 bar
Fluid:
Filtered air. No lubrication needed, if applied it shall be continuous.
Inert Gas.
Sweet gas (natural).

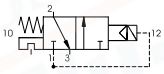

Operational characteristics					
Maximum working pressure (bar)	Flow rate at 6 bar with Δp=1 (Nl/min)	Connections	Weight (gr.)	Cv	kv
10	3500	1/2” NPT	3020	3,55	53,03

Solenoid valve with self-locking manual reset inverted

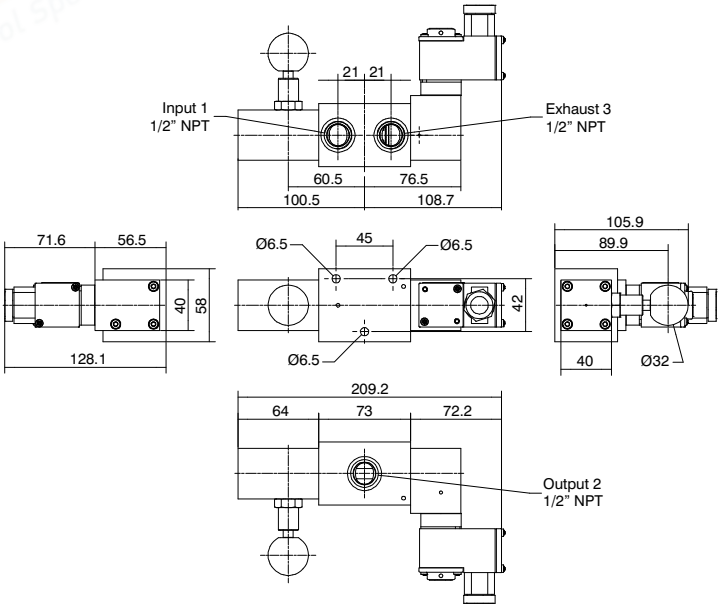

Ordering code
SS1232CCT15L
T TENSION 1 = 24 V DC 33 mA

Minimum piloting pressure 3 bar
Fluid:
Filtered air. No lubrication needed, if applied it shall be continuous.
Inert Gas.
Sweet gas (natural).

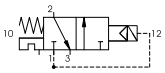

Operational characteristics					
Maximum working pressure (bar)	Flow rate at 6 bar with Δp=1 (Nl/min)	Connections	Weight (gr.)	Cv	kv
10	3500	1/2” NPT	3015	3,55	53,03

Flow regulator 1/2" NPT

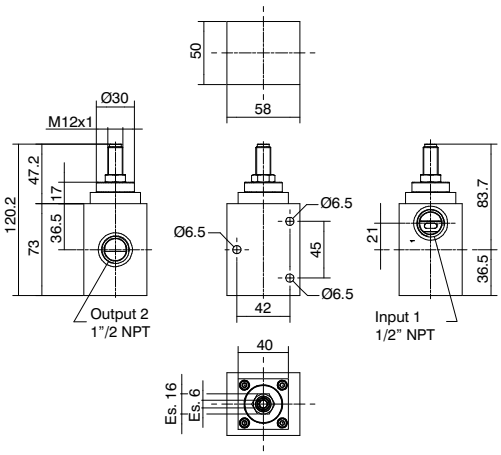

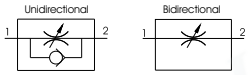

Fluid: Air, Inert Gas, Sweet gas (natural) - Filtered air.
No lubrication needed, if applied it shall be continuous.

Ordering code

SS12RF(F)(T)

	FUNCTION
(F)	U = Unidirectional
	B = Bidirectional
	TYPE
(T)	L = Low temperature version
	H = High temperature version

Operational characteristics					
Maximum working pressure (bar)	Flow rate at 6 bar with Δp=1 (Nl/min)	Connections	Weight (gr.)	Cv	kv
12	3500	1/2" NPT	1641	3,55	53,03

Non return valve

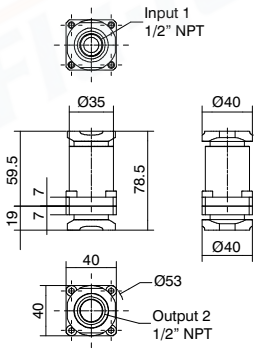

Fluid: Air, Inert Gas, Sweet gas (natural) - Filtered air.
No lubrication needed, if applied it shall be continuous.

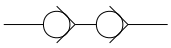

Ordering code

SS12VUS(T)

	TYPE
(T)	L = Low temperature version
	H = High temperature version

Operational characteristics					
Maximum working pressure (bar)	Flow rate at 6 bar with Δp=1 (Nl/min)	Connections	Weight (gr.)	Cv	kv
12	3500	1/2" NPT	444	3,55	53,03

Non return valve for group

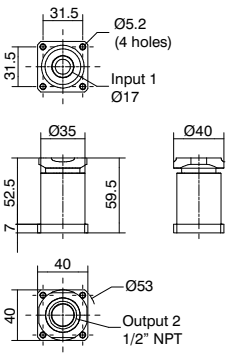

Fluid: Air, Inert Gas, Sweet gas (natural) - Filtered air.
No lubrication needed, if applied it shall be continuous.

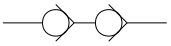

Ordering code

SS12VUG(T)

	TYPE
(T)	L = Low temperature version
	H = High temperature version

Operational characteristics					
Maximum working pressure (bar)	Flow rate at 6 bar with Δp=1 (Nl/min)	Connections	Weight (gr.)	Cv	kv
12	3500	1/2" NPT	296	3,55	53,03

Non return valve 1/4” NPT-F/F AISI 316L HT

Ordering code
SS14VU03SV4N

On request are available versions with temperature range: -55°C ... +150°C

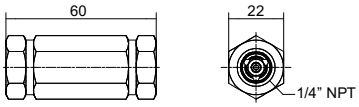

Weight gr. 107

Operational characteristics						
Maximum working pressure (bar)	Flow rate at 6 bar with Δp=1 (Nl/min)	Minimum operating pressure differential (bar)	Leak-tight with pressure differential (bar)	Temperature °C	Cv	kv
210	680	0,2	0,2	-25 ... +205	0,69	10,30

Non return valve 3/8” NPT-F/F AISI 316L HT

Ordering code
SS38VU03SV6N

On request are available versions with temperature range: -55°C ... +150°C

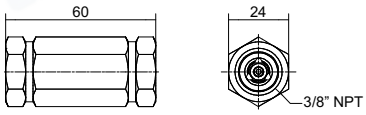

Weight gr. 253

Operational characteristics						
Maximum working pressure (bar)	Flow rate at 6 bar with Δp=1 (Nl/min)	Minimum operating pressure differential (bar)	Leak-tight with pressure differential (bar)	Temperature °C	Cv	kv
210	2020	0,2	0,2	-25 ... +205	2,05	30,60

Non return valve 1/2” NPT-F/F AISI 316L HT

Ordering code
SS12VU03SV8N

On request are available versions with temperature range: -55°C ... +150°C

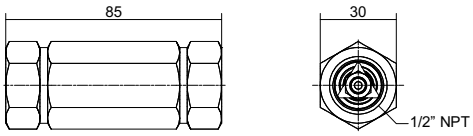

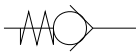

Weight gr. 380

Operational characteristics						
Maximum working pressure (bar)	Flow rate at 6 bar with Δp=1 (Nl/min)	Minimum operating pressure differential (bar)	Leak-tight with pressure differential (bar)	Temperature °C	Cv	kv
210	2650	0,2	0,2	-25 ... +205	2,69	40,15

Non return valve 3/4” NPT-F/F AISI 316L HT

Ordering code
SS34VU03SV12N

On request are available versions with temperature range: -55°C ... +150°C

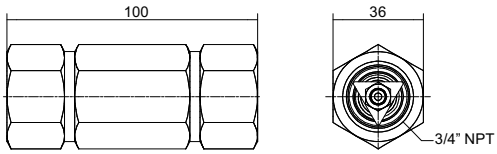

Weight gr. 577

Operational characteristics						
Maximum working pressure (bar)	Flow rate at 6 bar with Δp=1 (Nl/min)	Minimum operating pressure differential (bar)	Leak-tight with pressure differential (bar)	Temperature °C	Cv	kv
210	4030	0,2	0,2	-25 ... +205	4,09	61,06

Non return valve 1” NPT-F/F AISI 316L HT

Ordering code
SS11VU03SV16N

On request are available versions with temperature range: -55°C ... +150°C

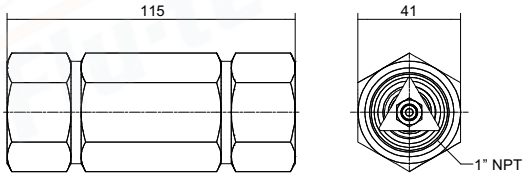

Weight gr. 774

Operational characteristics						
Maximum working pressure (bar)	Flow rate at 6 bar with Δp=1 (Nl/min)	Minimum operating pressure differential (bar)	Leak-tight with pressure differential (bar)	Temperature °C	Cv	kv
210	5500	0,2	0,2	-25 ... +205	5,59	83,33

Flow regulator 1/4” NPT single use

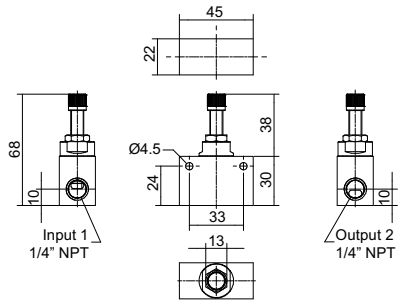

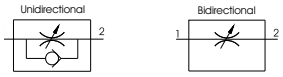

Ordering code

SS1401RFT

F	FUNCTION
	U = Unidirectional
	B = Bidirectional
T	TYPE
	L = Low temperature version
	H = High temperature version

Operational characteristics

Maximum working pressure (bar)	Flow rate at 6 bar with Δp=1 (Nl/min)	Connections	Weight (gr.)	Temperature °C		Cv	kv
12	700	1/4” NPT	219	-50 ... +70 (version L)	-10 ... +150 (version H)	0,71	10,60

Flow regulator 1/2” NPT single use

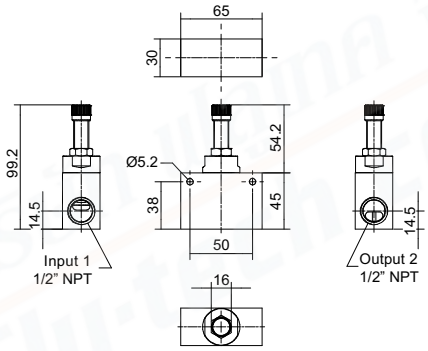

Ordering code

SS1201RFT

F	FUNCTION
	U = Unidirectional
	B = Bidirectional
T	TYPE
	L = Low temperature version
	H = High temperature version

Operational characteristics

Maximum working pressure (bar)	Flow rate at 6 bar with Δp=1 (Nl/min)	Connections	Weight (gr.)	Temperature °C		Cv	kv
12	2000	1/2” NPT	634,5	-50 ... +70 (version L)	-10 ... +150 (version H)	2,03	30,30

Flow regulator 3/4” NPT single use

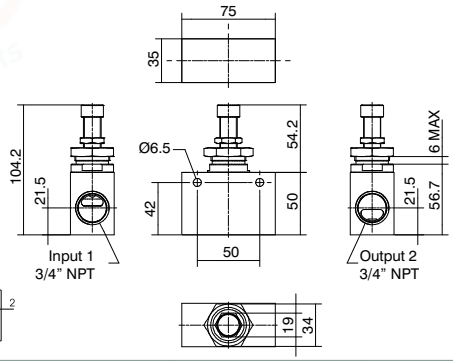

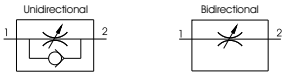

Ordering code

SS3401RFT

F	FUNCTION
	U = Unidirectional
	B = Bidirectional
T	TYPE
	L = Low temperature version
	H = High temperature version

Operational characteristics

Maximum working pressure (bar)	Flow rate at 6 bar with Δp=1 (Nl/min)	Connections	Weight (gr.)	Temperature °C		Cv	kv
12	2800	3/4” NPT	925	-50 ... +70 (version L)	-10 ... +150 (version H)	2,84	42,42

Flow regulator 1” NPT single use

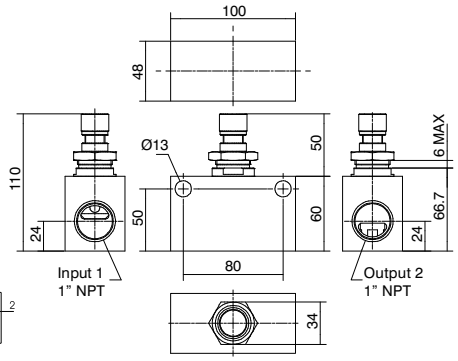

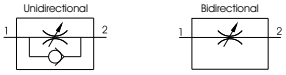

Ordering code

SS1101RFT

F	FUNCTION
	U = Unidirectional
	B = Bidirectional
T	TYPE
	L = Low temperature version
	H = High temperature version

Operational characteristics

Maximum working pressure (bar)	Flow rate at 6 bar with Δp=1 (Nl/min)	Connections	Weight (gr.)	Temperature °C		Cv	kv
12	3300	1” NPT	2000	-50 ... +70 (version L)	-10 ... +150 (version H)	3,35	50

Flow regulator system 1/4” NPT tamper-proof system

Ordering code
SS14RFK

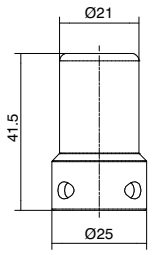

Note: Available for 1/4” NPT flow regulator
We suggest using a long shackle padlock: Shackle diameter ≤ 4mm
The padlock is not supplied with the product.
Weight gr. 40

Flow regulator system 1/2” NPT tamper-proof system

Ordering code
SS12RFK

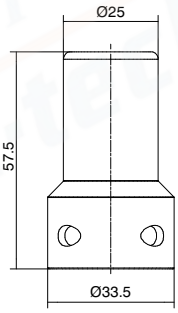

Note: Available for 1/2” NPT flow regulator
We suggest using a long shackle padlock: Shackle diameter ≤ 5mm
The padlock is not supplied with the product.
Weight gr. 75

บริษัท ฟลูเทค วาล์ว จำกัด
Flutech CO.,ltd
Fluid Control Specialists

Quick exhaust valve 1/4" NPT

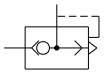

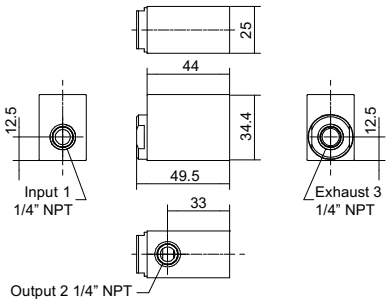

Ordering code

SS1402SR(T)

(T)	TYPE
	L = Low temperature version
	H = High temperature version

Operational characteristics

Maximum working pressure (bar)	Inlet flow rate at 6 bar with Δp=1 (Nl/min)	Cv	kv	Flow rate from 2 to 3 at 6 bar on free exhaust (Nl/min)	Cv	kv	Connections	Temperature °C		Weight (gr.)
12	700	0,71	10,60	2700	2,74	40,9	1/4" NPT	-50 ... +70 (version L)	-10 +150 (version H)	250

Quick exhaust valve 1/2" NPT

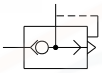

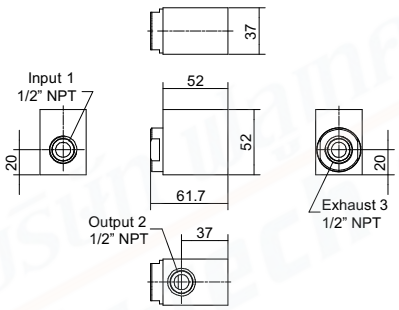

Ordering code

SS1202SR(T)

(T)	TYPE
	L = Low temperature version
	H = High temperature version

Operational characteristics

Maximum working pressure (bar)	Inlet flow rate at 6 bar with Δp=1 (Nl/min)	Cv	kv	Flow rate from 2 to 3 at 6 bar on free exhaust (Nl/min)	Cv	kv	Connections	Temperature °C		Weight (gr.)
12	2000	2,03	30,30	7150	7,26	108,33	1/2" NPT	-50 ... +70 (version L)	-10 +150 (version H)	617,5

Quick exhaust valve 3/4" NPT

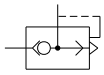

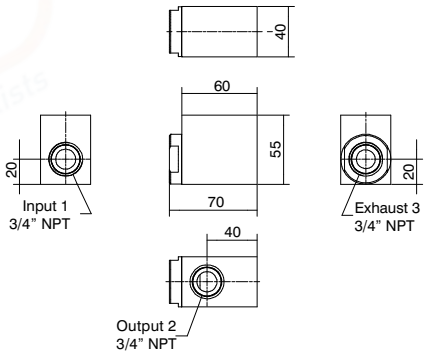

Ordering code

SS3402SR(T)

(T)	TYPE
	L = Low temperature version
	H = High temperature version

Operational characteristics

Maximum working pressure (bar)	Inlet flow rate at 6 bar with Δp=1 (Nl/min)	Cv	kv	Flow rate from 2 to 3 at 6 bar on free exhaust (Nl/min)	Cv	kv	Connections	Temperature °C		Weight (gr.)
12	3000	3,04	45,45	10000	10,16	151,51	3/4" NPT	-50 ... +70 (version L)	-10 +150 (version H)	745

Quick exhaust valve 1" NPT

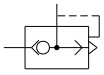

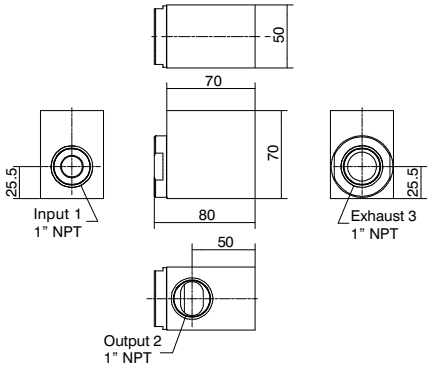

Ordering code

SS1102SR(T)

(T)	TYPE
	L = Low temperature version
	H = High temperature version

Operational characteristics

Maximum working pressure (bar)	Inlet flow rate at 6 bar with Δp=1 (Nl/min)	Cv	kv	Flow rate from 2 to 3 at 6 bar on free exhaust (Nl/min)	Cv	kv	Connections	Temperature °C		Weight (gr.)
12	5000	5,08	75,75	18000	18,29	272,72	1" NPT	-50 ... +70 (version L)	-10 +150 (version H)	1365

Pneumatic actuated valves series SA - aluminium

PNEUMAX, worldwide recognized leader in industrial automation, provide a wide range of solutions and components for the process automation industry. Application oriented production and long-term experience in wide range applications makes Pneumax a reliable partner capable to assist the customers since the very beginning of project execution.

General
Brand aluminum valve series has been developed in compliance with the latest and most technologically advance testing and prototyping methodologies, to secure top performances and reliability. The widest product selection and configuration makes Pneumax aluminum valve a proper selection for both Grass Roots Plants execution and Plant retrofiting / upgrading.
Main industries served are Chemical, Petrochemical, Power Generation and Oil & Gas.

All external and internal parts are aluminum material.

The range includes balanced spool valves with 3 and 5 way function valves, with the following functions available:
- Pneumatic-spring valve
- Pneumatic-pneumatic valve
- 2 position push-pull valve **(only for 1/4" NPT version)**
- Push button-spring valve **(only for 1/4" NPT version)**
- Push button-pneumatic return valve **(only for 1/4" NPT version)**
- Accessories which include: Non return valve, Uni/bidirectional flow regulator and Quick exhaust valve
- 1/8" NPT pilot connection

Working port size	Flow at 6 bar with Δp=1 (Nl/min)
1/4" NPT	1360
1/2" NPT	2500
1" NPT	6500

Construction characteristics	
Body	Aluminium
Operators	Aluminium
Spacers	Aluminium
Spool	AISI 303 stainless steel
Spring	AISI 302 stainless steel
Screws	Stainless steel
Seals	NBR for low temperature (-30°C)

Operating range	
Fluid	Filtered air. No lubrication needed, if applied it shall be continuous. Inert Gas. Sweet gas (natural).
Operating temperature	-30°C ... +70°C
Maximum operating pressure	12 bar

Certifications available:

ATEX CE Ex II 2 GD c IIC T5 T100°C
: [CE Ex **II 2G Ex h IIC Gb**
CE Ex **II 2D Ex h IIIC T100°C Db**]

: Suitable up to SIL 3

Overall dimensions and technical information are provided solely for informative purposes and may be modified without notice

Pneumatic-Pneumatic

Ordering code
SA1432C1111L

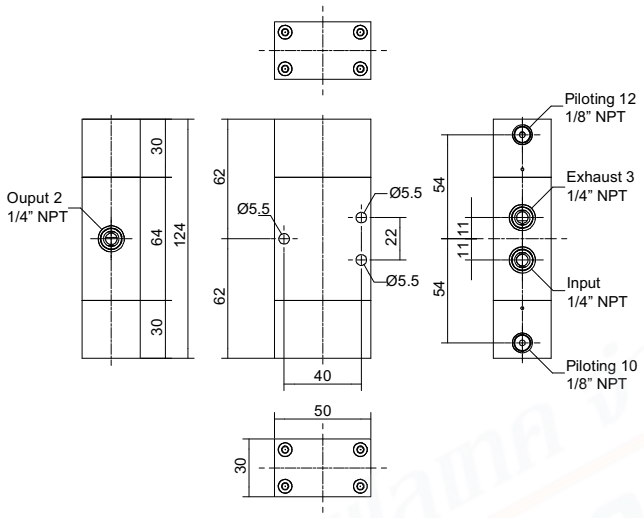

Weight gr. 470
Minimum piloting pressure 2 bar

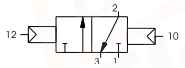

Operational characteristics								
Fluid	Maximum working pressure (bar)	Temperature °C	Flow rate at 6 bar with Δp=1 (Nl/min)	Orifice size (mm)	Working port size	Pilot connections	Cv	kv
Filtered and lubricated air	12	-30 ... +70	1360	8	1/4” NPT	1/8” NPT	1,38	20,60

Pneumatic-Pneumatic

Ordering code
SA145201111L

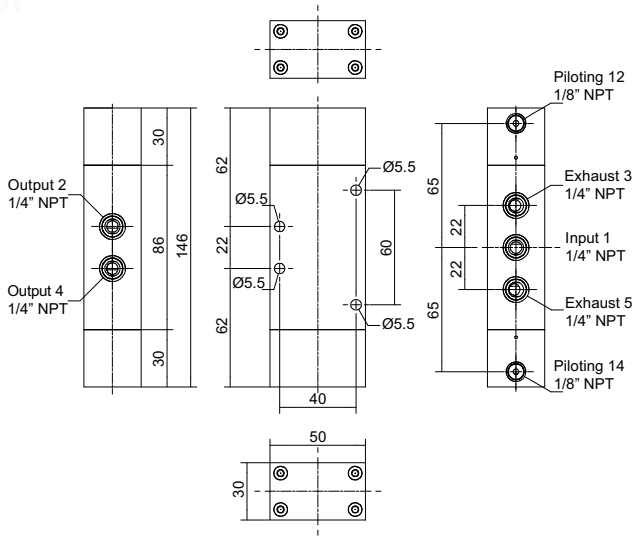

Weight gr. 550
Minimum piloting pressure 2 bar

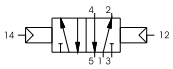

Operational characteristics								
Fluid	Maximum working pressure (bar)	Temperature °C	Flow rate at 6 bar with Δp=1 (Nl/min)	Orifice size (mm)	Working port size	Pilot connections	Cv	kv
Filtered and lubricated air	12	-30 ... +70	1360	8	1/4” NPT	1/8” NPT	1,38	20,60

Pneumatic-Spring

Ordering code
SA1432C1101L

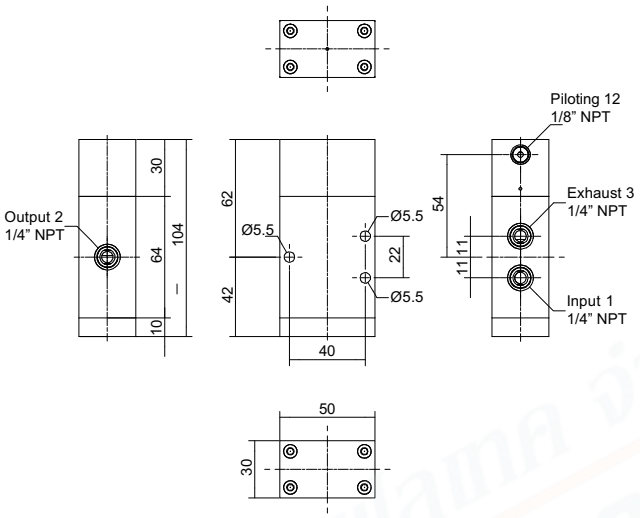

Weight gr. 394
Minimum piloting pressure 2,5 bar

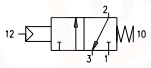

Operational characteristics								
Fluid	Maximum working pressure (bar)	Temperature °C	Flow rate at 6 bar with Δp=1 (Nl/min)	Orifice size (mm)	Working port size	Pilot connections	Cv	kv
Filtered and lubricated air	12	-30 ... +70	1360	8	1/4" NPT	1/8" NPT	1,38	20,60

Pneumatic-Spring

Ordering code
SA145201101L

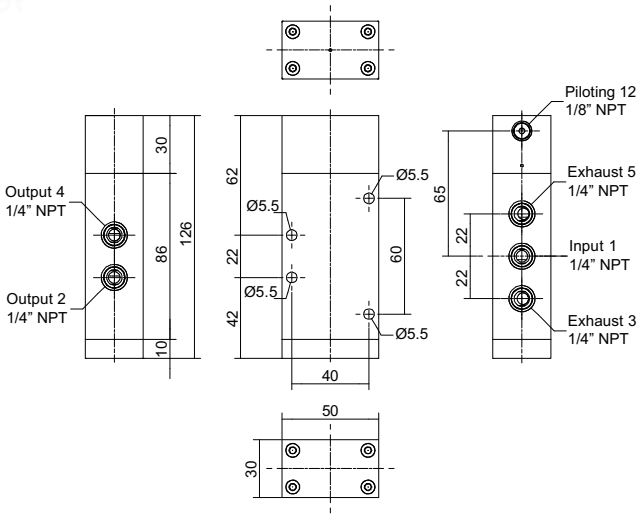

Weight gr. 475
Minimum piloting pressure 2,5 bar

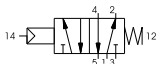

Operational characteristics								
Fluid	Maximum working pressure (bar)	Temperature °C	Flow rate at 6 bar with Δp=1 (Nl/min)	Orifice size (mm)	Working port size	Pilot connections	Cv	kv
Filtered and lubricated air	12	-30 ... +70	1360	8	1/4" NPT	1/8" NPT	1,38	20,60

Overall dimensions and technical information are provided solely for informative purposes and may be modified without notice

Push button-pneumatic valve

Ordering code
SA1432C0801L

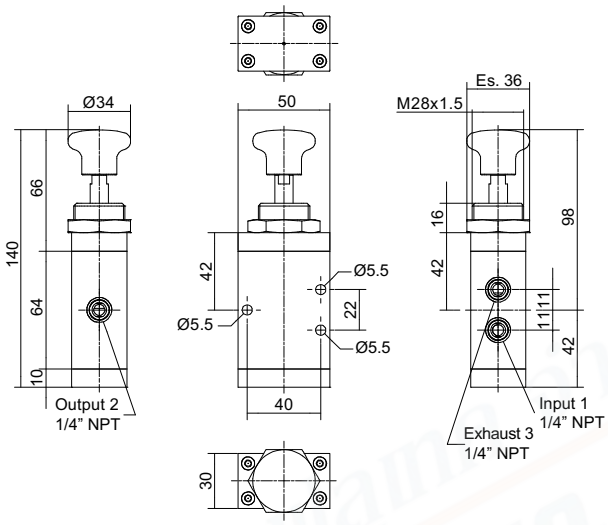

Weight gr. 405
Actuation force 71,5N

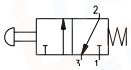

Operational characteristics							
Fluid	Maximum working pressure (bar)	Temperature °C	Flow rate at 6 bar with Δp=1 (Nl/min)	Orifice size (mm)	Working port size	Cv	kv
Filtered and lubricated air	12	-30 ... +70	1360	8	1/4” NPT	1,38	20,60

Push button-pneumatic valve

Ordering code
SA145200801L

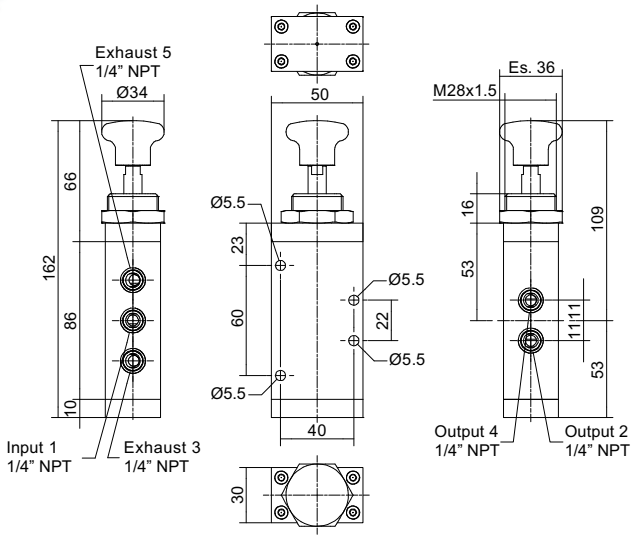

Weight gr. 487
Actuation force 71,5N

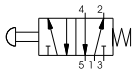

Operational characteristics							
Fluid	Maximum working pressure (bar)	Temperature °C	Flow rate at 6 bar with Δp=1 (Nl/min)	Orifice size (mm)	Working port size	Cv	kv
Filtered and lubricated air	12	-30 ... +70	1360	8	1/4” NPT	1,38	20,60

Bistable push button valve

Ordering code
SA1432C0803L

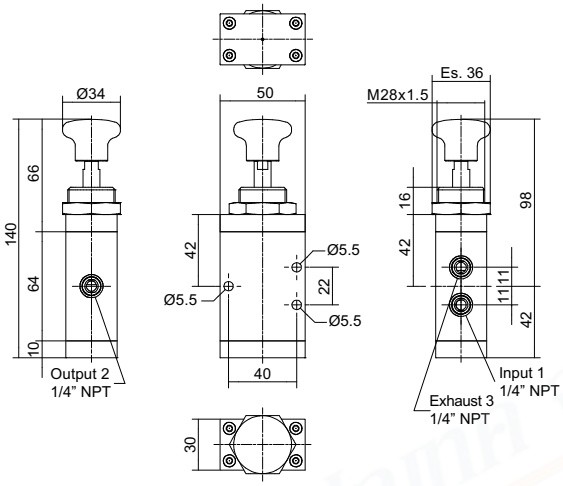

Weight gr. 395
Actuation force 105N

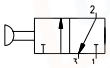

Operational characteristics							
Fluid	Maximum working pressure (bar)	Temperature °C	Flow rate at 6 bar with Δp=1 (Nl/min)	Orifice size (mm)	Working port size	Cv	kv
Filtered and lubricated air	12	-30 ... +70	1360	8	1/4" NPT	1,38	20,60

Bistable push button valve

Ordering code
SA145200803L

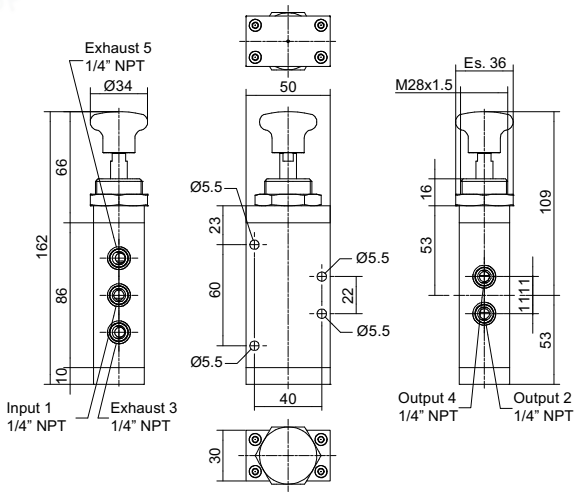

Weight gr. 483
Actuation force 105N

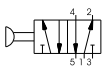

Operational characteristics							
Fluid	Maximum working pressure (bar)	Temperature °C	Flow rate at 6 bar with Δp=1 (Nl/min)	Orifice size (mm)	Working port size	Cv	kv
Filtered and lubricated air	12	-30 ... +70	1360	8	1/4" NPT	1,38	20,60

Overall dimensions and technical information are provided solely for informative purposes and may be modified without notice

Push button-pneumatic valve

Ordering code
SA1432C0811L

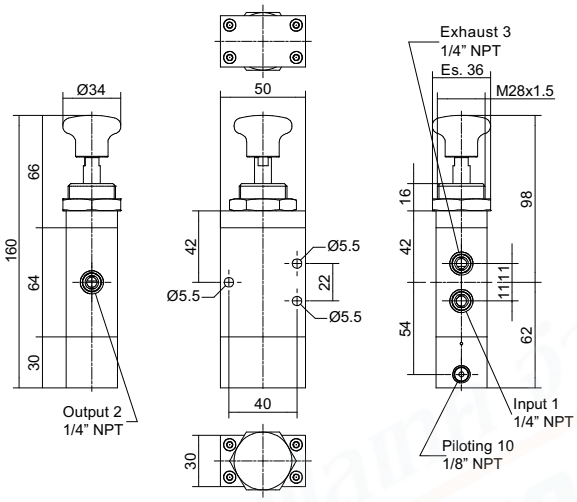

Weight gr. 481
Minimum piloting pressure 2 bar

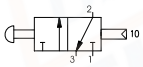

Operational characteristics								
Fluid	Maximum working pressure (bar)	Temperature °C	Flow rate at 6 bar with Δp=1 (Nl/min)	Orifice size (mm)	Working port size	Pilot connections	Cv	kv
Filtered and lubricated air	12	-30 ... +70	1360	8	1/4” NPT	1/8” NPT	2,54	37,88

Push button-pneumatic valve

Ordering code
SA145200811L

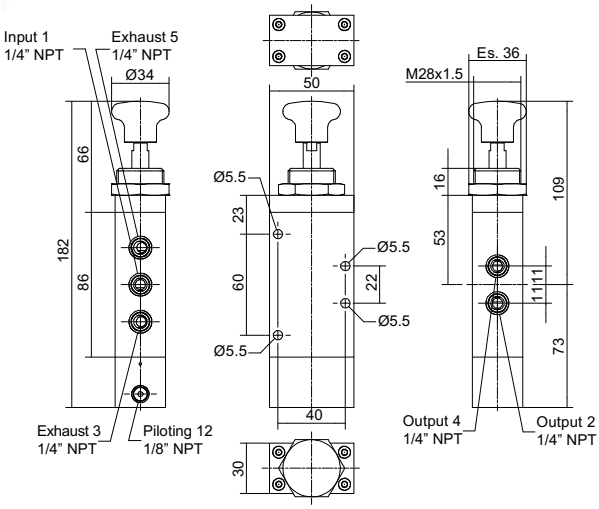

Weight gr. 561
Minimum piloting pressure 2 bar

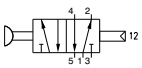

Operational characteristics								
Fluid	Maximum working pressure (bar)	Temperature °C	Flow rate at 6 bar with Δp=1 (Nl/min)	Orifice size (mm)	Working port size	Pilot connections	Cv	kv
Filtered and lubricated air	12	-30 ... +70	1360	8	1/4” NPT	1/8” NPT	2,54	37,88

Pneumatic-Pneumatic

Ordering code
SA1232C1111L

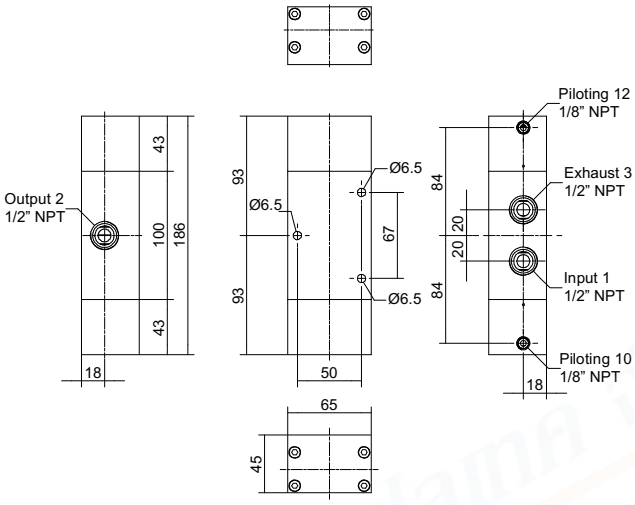

Weight gr. 1360
Minimum piloting pressure 2 bar

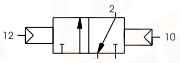

Operational characteristics								
Fluid	Maximum working pressure (bar)	Temperature °C	Flow rate at 6 bar with Δp=1 (Nl/min)	Orifice size (mm)	Working port size	Pilot connections	Cv	kv
Filtered and lubricated air	12	-30 ... +70	2500	15	1/2” NPT	1/8” NPT	2,54	37,88

Pneumatic-Pneumatic

Ordering code
SA125201111L

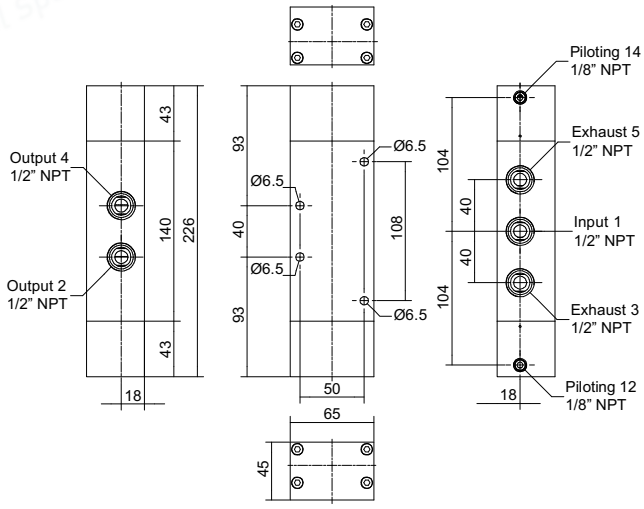

Weight gr. 1660
Minimum piloting pressure 2 bar

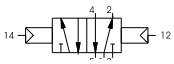

Operational characteristics								
Fluid	Maximum working pressure (bar)	Temperature °C	Flow rate at 6 bar with Δp=1 (Nl/min)	Orifice size (mm)	Working port size	Pilot connections	Cv	kv
Filtered and lubricated air	12	-30 ... +70	2500	15	1/2” NPT	1/8” NPT	2,54	37,88

Overall dimensions and technical information are provided solely for informative purposes and may be modified without notice

Pneumatic-Spring

Ordering code
SA1232C1101L

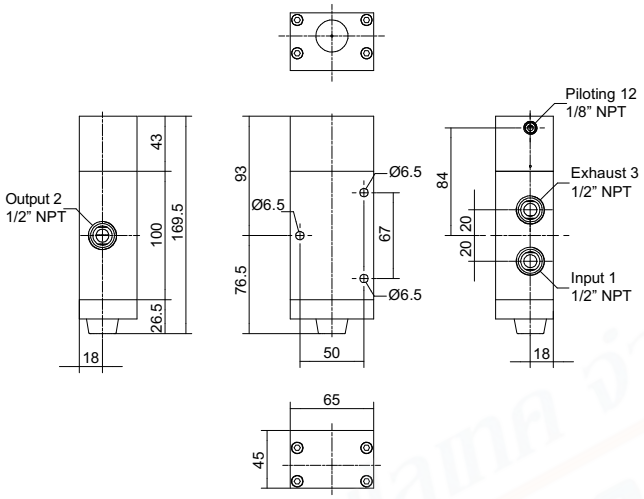

Weight gr. 1135
Minimum piloting pressure 2,5 bar

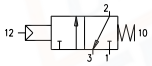

Operational characteristics								
Fluid	Maximum working pressure (bar)	Temperature °C	Flow rate at 6 bar with Δp=1 (Nl/min)	Orifice size (mm)	Working port size	Pilot connections	Cv	kv
Filtered and lubricated air	12	-30 ... +70	2500	15	1/2 NPT	1/8” NPT	2,54	37,88

Pneumatic-Spring

Ordering code
SA125201101L

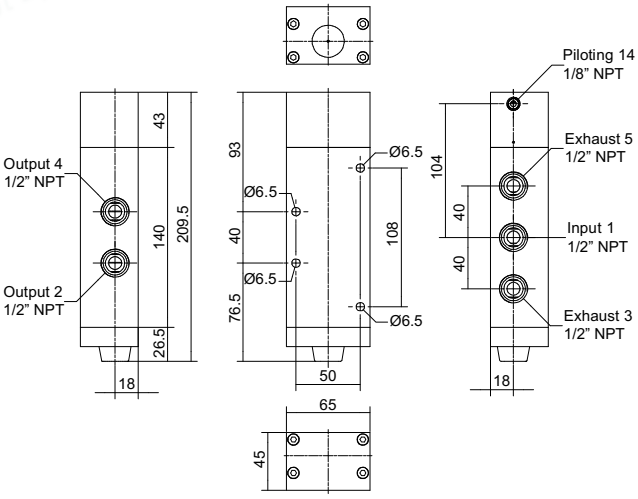

Weight gr. 1430
Minimum piloting pressure 2,5 bar

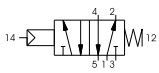

Operational characteristics								
Fluid	Maximum working pressure (bar)	Temperature °C	Flow rate at 6 bar with Δp=1 (Nl/min)	Orifice size (mm)	Working port size	Pilot connections	Cv	kv
Filtered and lubricated air	12	-30 ... +70	2500	15	1/2” NPT	1/8” NPT	2,54	37,88

บริษัท พูนทวี เทค จำกัด
Fluid Control Specialists
Fluid-tech co.,ltd

Pneumatic-Pneumatic

Ordering code
SA1132C1111L

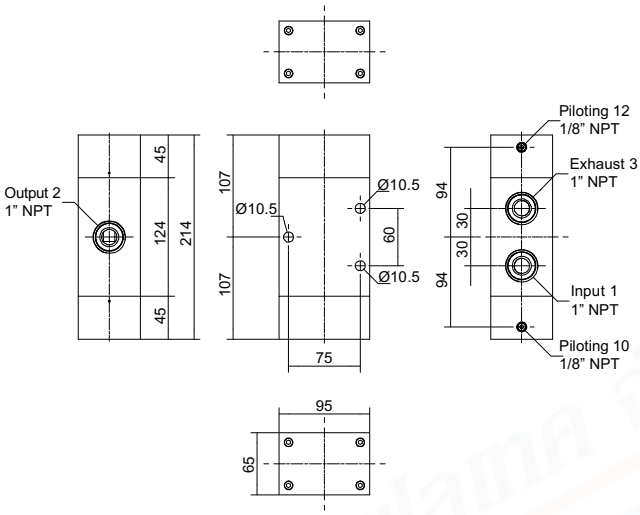

Weight gr. 3315
Minimum piloting pressure 2 bar

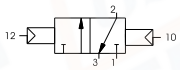

Operational characteristics								
Fluid	Maximum working pressure (bar)	Temperature °C	Flow rate at 6 bar with Δp=1 (Nl/min)	Orifice size (mm)	Working port size	Pilot connections	Cv	kv
Filtered and lubricated air	12	-30 ... +70	6500	20	1” NPT	1/8” NPT	6,60	98,48

Pneumatic-Pneumatic

Ordering code
SA115201111L

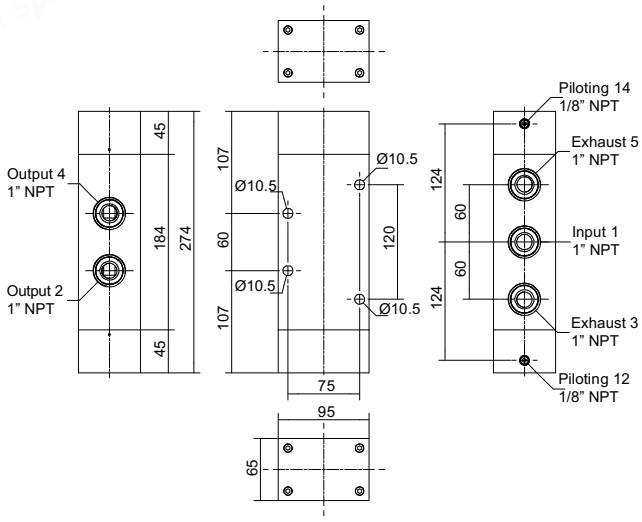

Weight gr. 4220
Minimum piloting pressure 2 bar

Operational characteristics								
Fluid	Maximum working pressure (bar)	Temperature °C	Flow rate at 6 bar with Δp=1 (Nl/min)	Orifice size (mm)	Working port size	Pilot connections	Cv	kv
Filtered and lubricated air	12	-30 ... +70	6500	20	1” NPT	1/8” NPT	6,60	98,48

Overall dimensions and technical information are provided solely for informative purposes and may be modified without notice

Pneumatic-Spring

Ordering code
SA1132C1101L

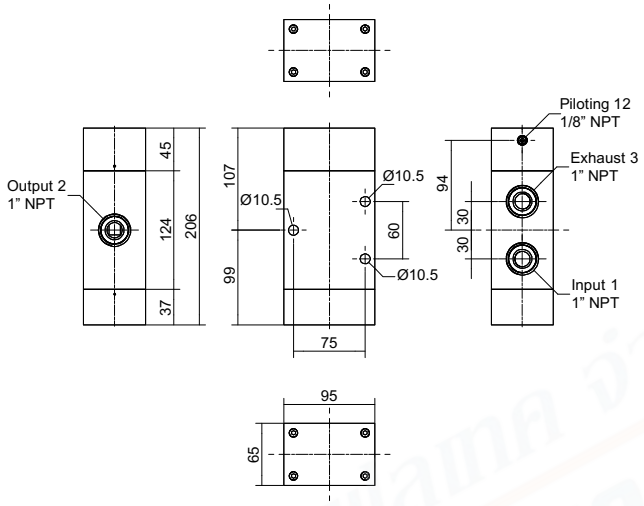

Weight gr. 3225
Minimum piloting pressure 2,5 bar

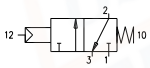

Operational characteristics								
Fluid	Maximum working pressure (bar)	Temperature °C	Flow rate at 6 bar with Δp=1 (Nl/min)	Orifice size (mm)	Working port size	Pilot connections	Cv	kv
Filtered and lubricated air	12	-30 ... +70	6500	20	1” NPT	1/8” NPT	6,60	98,48

Pneumatic-Spring

Ordering code
SA115201101L

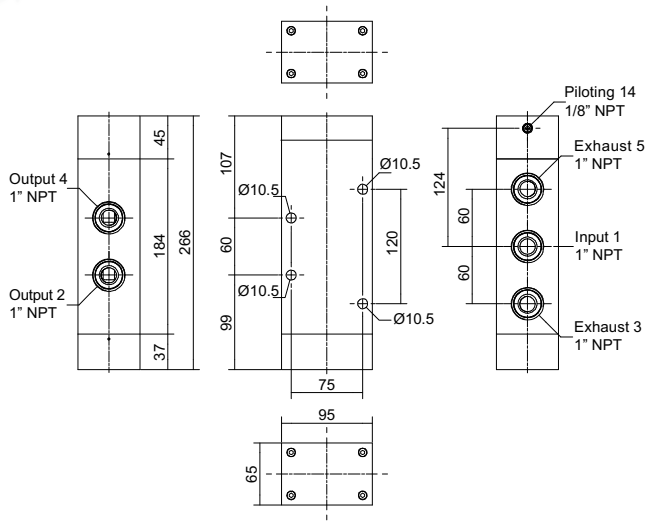

Weight gr. 4130
Minimum piloting pressure 2,5 bar

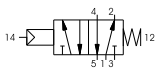

Operational characteristics								
Fluid	Maximum working pressure (bar)	Temperature °C	Flow rate at 6 bar with Δp=1 (Nl/min)	Orifice size (mm)	Working port size	Pilot connections	Cv	kv
Filtered and lubricated air	12	-30 ... +70	6500	20	1” NPT	1/8” NPT	6,60	98,48

PROCESS AUTOMATION TECHNOLOGY

Flow regulator 1/4" NPT

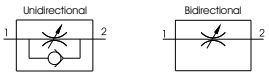

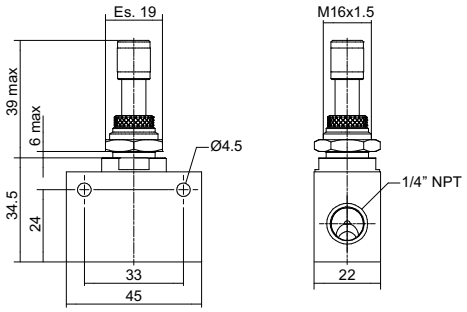

Weight gr. 102

Ordering code
A6.01.F
FUNCTION
F 14N=Unidirectional
14/1N=Bidirectional

Operational characteristics						
Fluid	Maximum working pressure (bar)	Flow rate at 6 bar with Δp=1 (Nl/min)	Orifice size (mm)	Temperature °C	Cv	kv
Filtered air	12	900	7	-30 ... +70	0,91	13,63

Flow regulator 1/2" NPT

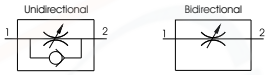

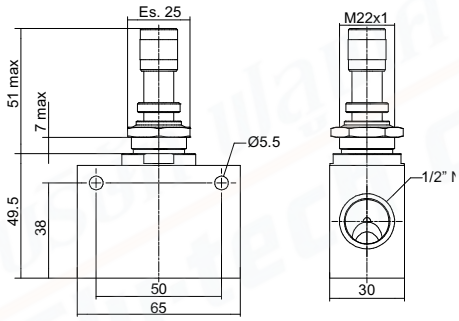

Weight gr. 276

Ordering code
A6.01.F
FUNCTION
F 12N=Unidirectional
12/1N=Bidirectional

Operational characteristics						
Fluid	Maximum working pressure (bar)	Flow rate at 6 bar with Δp=1 (Nl/min)	Orifice size (mm)	Temperature °C	Cv	kv
Filtered air	12	2000	12	-30 ... +70	2,03	30,30

Flow regulator 3/4" NPT - Unidirectional

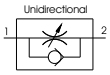

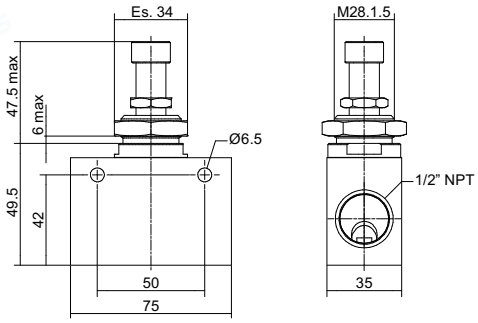

Weight gr. 482

Ordering code
A6.01.34

Operational characteristics						
Fluid	Maximum working pressure (bar)	Flow rate at 6 bar with Δp=1 (Nl/min)	Orifice size (mm)	Temperature °C	Cv	kv
Filtered air	12	2800	12	-30 ... +70	2,84	42,42

Flow regulator 1" NPT - Unidirectional

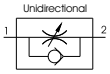

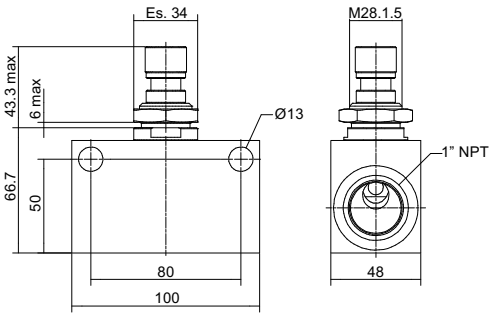

Weight gr. 874

Ordering code
A6.01.11

Operational characteristics						
Fluid	Maximum working pressure (bar)	Flow rate at 6 bar with Δp=1 (Nl/min)	Orifice size (mm)	Temperature °C	Cv	kv
Filtered air	12	3300	14	-30 ... +70	3,35	50

Overall dimensions and technical information are provided solely for informative purposes and may be modified without notice

Quick exhaust valve 1/4” NPT

Ordering code
A6.02.14

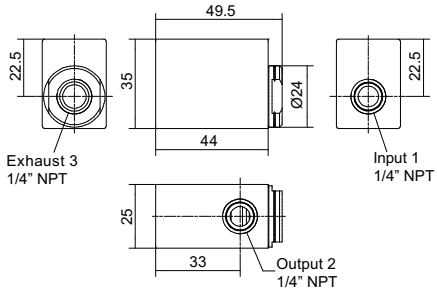

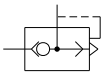

Weight gr. 112

Operational characteristics								
Fluid	Working pressure (bar)	Flow rate from 1 to 2 at 6 bar with Δp=1 (Nl/min)	Cv	kv	Flow rate from 2 to 3 at 6 bar on free exhaust (Nl/min)	Cv	kv	Temperature °C
Filtered air	0,5 ... 10	500	0.50	0.75	2500	2,54	37,87	-30 ... +70

Quick exhaust valve 1/2” NPT

Ordering code
A6.02.12

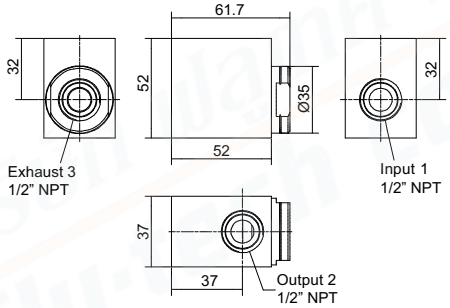

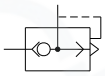

Weight gr. 310

Operational characteristics								
Fluid	Working pressure (bar)	Flow rate from 1 to 2 at 6 bar with Δp=1 (Nl/min)	Cv	kv	Flow rate from 2 to 3 at 6 bar on free exhaust (Nl/min)	Cv	kv	Temperature °C
Filtered air	0,5 ... 10	1500	1,52	22,72	6000	6,10	90,90	-30 ... +70

Quick exhaust valve 3/4” NPT

Ordering code
A6.02.34

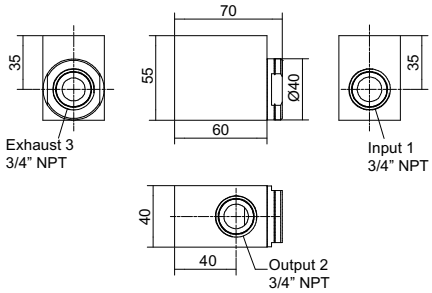

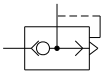

Weight gr. 400

Operational characteristics								
Fluid	Working pressure (bar)	Flow rate from 1 to 2 at 6 bar with Δp=1 (Nl/min)	Cv	kv	Flow rate from 2 to 3 at 6 bar on free exhaust (Nl/min)	Cv	kv	Temperature °C
Filtered air	0,5 ... 10	3000	3,04	45,45	10000	10,16	151,51	-30 ... +70

Quick exhaust valve 1” NPT

Ordering code
A6.02.11

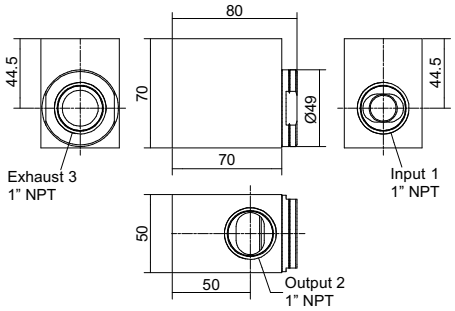

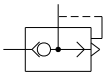

Weight gr. 670

Operational characteristics								
Fluid	Working pressure (bar)	Flow rate from 1 to 2 at 6 bar with Δp=1 (Nl/min)	Cv	kv	Flow rate from 2 to 3 at 6 bar on free exhaust (Nl/min)	Cv	kv	Temperature °C
Filtered air	0,5 ... 10	5000	5,08	75,75	18000	18,29	272,72	-30 ... +70

Non return valve 1/4" NPT

Ordering code
A6.07.14

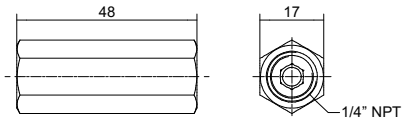

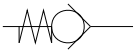

Operational characteristics						
Fluid	Maximum working pressure (bar)	Flow rate at 6 bar with Δp=1 (Nl/min)	Temperature °C	Weight (gr.)	Cv	kv
Filtered and lubricated air	12	1450	-30 ... +70	59	1,47	21,97

Non return valve 1/2" NPT

Ordering code
A6.07.12

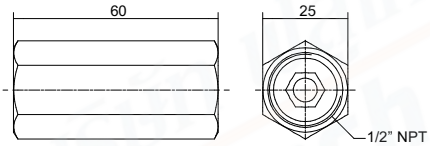

Operational characteristics						
Fluid	Maximum working pressure (bar)	Flow rate at 6 bar with Δp=1 (Nl/min)	Temperature °C	Weight (gr.)	Cv	kv
Filtered and lubricated air	12	3500	-30 ... +70	139	3,55	53,03

Non return valve 3/4" NPT

Ordering code
A6.07.34

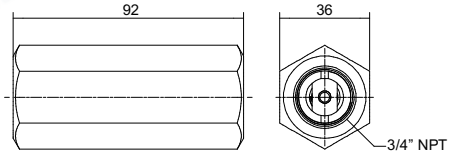

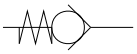

Operational characteristics						
Fluid	Maximum working pressure (bar)	Flow rate at 6 bar with Δp=1 (Nl/min)	Temperature °C	Weight (gr.)	Cv	kv
Filtered and lubricated air	12	6250	-30 ... +70	564	6,35	94,69

Non return valve 1" NPT

Ordering code
A6.07.11

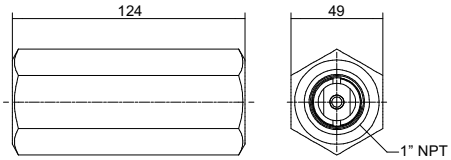

Operational characteristics						
Fluid	Maximum working pressure (bar)	Flow rate at 6 bar with Δp=1 (Nl/min)	Temperature °C	Weight (gr.)	Cv	kv
Filtered and lubricated air	12	9500	-30 ... +70	1502	9,65	143,94

Overall dimensions and technical information are provided solely for informative purposes and may be modified without notice

Valves and Solenoid valves poppet system 1/2” NPT - 3/4” NPT - 1” NPT series SA - aluminium

Pneumax poppet valves are excellent solution for application that requires high flow rates figures. Engineered and designed 3/2 configuration, normally closed, pneumatic-spring return execution. When used for compressed air, functionality is similar to spool valves.

Construction characteristics

	1/2” NPT - 3/4” NPT	1” NPT
Body	Die casting zinc alloy	Aluminium
End covers	Aluminium	
Actuators	NBR	
Pistons	Aluminium	
Actuator rod	Stainless steel	
Springs	Stainless steel	
Seals	NBR	

Operating range

Fluid	Filtered air. No lubrication needed, if applied it shall be continuous. Inert Gas. Sweet gas (natural).
Operating temperature	-30°C ... +70°C
Maximum operating pressure	12 bar

Certifications available:

ATEX CE Ex II 2 GD c IIB T5 T100°C

: [CE Ex **II 2G Ex h IIB T5 Gb**
CE Ex **II 2D Ex h IIIC T100°C Db**]

: Suitable up to SIL 3

Flu-tech บริษัท ฟลูเท็ค จำกัด Flu-tech co.,ltd Fluid Control Specialists

Pneumatic-Spring - 1/2” NPT

Ordering code
SA772321101C

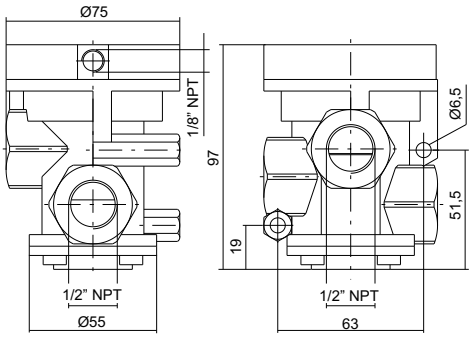

Weight gr. 1058
Normally closed
Minimum piloting pressure 2,5 bar

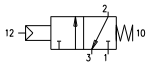

Operational characteristics								
Fluid	Maximum working pressure (bar)	Temperature °C	Flow rate at 6 bar with Δp=1 (Nl/min)	Orifice size (mm)	Working port size	Pilot connections	Cv	kv
Filtered and lubricated air	12	-30 ... +70	4800	15	1/2” NPT	1/8” NPT	4,88	72,72

Pneumatic-Spring - 3/4” NPT

Ordering code
SA773321101C

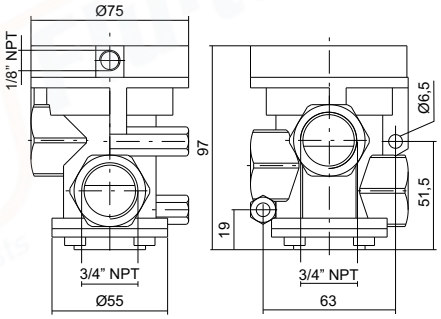

Weight gr. 973
Normally closed
Minimum piloting pressure 2,5 bar

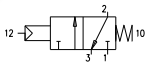

Operational characteristics								
Fluid	Maximum working pressure (bar)	Temperature °C	Flow rate at 6 bar with Δp=1 (Nl/min)	Orifice size (mm)	Working port size	Pilot connections	Cv	kv
Filtered and lubricated air	12	-30 ... +70	6100	20	3/4” NPT	1/8” NPT	6,20	92,42

Pneumatic-Spring - 1” NPT

Ordering code
SA771321101C

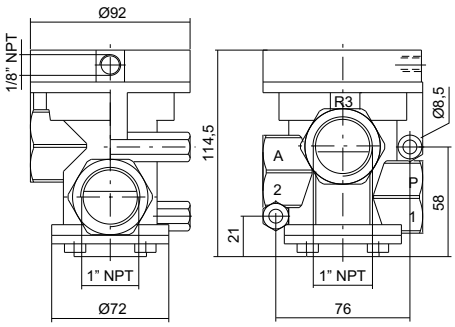

Weight gr. 1016
Normally closed
Minimum piloting pressure 2,5 bar

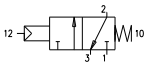

Operational characteristics								
Fluid	Maximum working pressure (bar)	Temperature °C	Flow rate at 6 bar with Δp=1 (Nl/min)	Orifice size (mm)	Working port size	Pilot connections	Cv	kv
Filtered and lubricated air	12	-30 ... +70	12000	25	1” NPT	1/8” NPT	12,19	181,81

Overall dimensions and technical information are provided solely for informative purposes and may be modified without notice

Valves and Solenoid valves poppet system 1 1/2” NPT series SA - aluminium

Brand SAN776 (1 1/2” NPT) valve series have been upgraded replacing the traditional piston with a rolling diaphragm. This solution minimize friction with overall benefit on the valve seat wearing.

Construction characteristics

Body, operator and end cover	Die casting aluminium
Seals and poppet	NBR oil resistant rubber
Piston	Aluminium
Pin guide	Stainless steel
Springs	Stainless steel
Diaphragm	NBR oil resistant rubber

Operating range

Fluid	Filtered air. No lubrication needed, if applied it shall be continuous. Inert Gas. Sweet gas (natural).
Operating temperature	-30°C ... +70°C
Maximum operating pressure	12 bar

Minimum working pressure diagram for external pilot versions N.C.

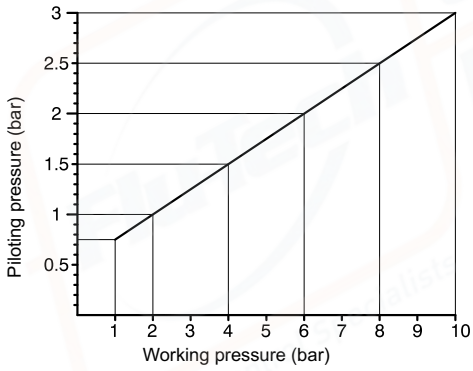

Certifications available:

ATEX CE Ex II 2 GD c IIB T5 T100°C

: [CE Ex **II 2G Ex h IIB T5 Gb**
CE Ex **II 2D Ex h IIIC T100°C Db**]

: Suitable up to SIL 3

PROCESS AUTOMATION TECHNOLOGY

Pneumatic-Spring - 1 1/2” NPT

Ordering code
SAN776321101

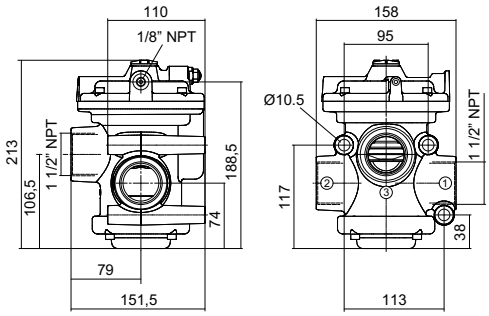

Weight gr. 3514
Normally closed
Minimum piloting pressure “Vedi grafico nelle Generalità”

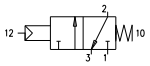

Operational characteristics								
Fluid	Maximum working pressure (bar)	Temperature °C	Flow rate at 6 bar with Δp=1 (Nl/min)	Orifice size (mm)	Working port size	Pilot connections	Cv	kv
Filtered and lubricated air	12	-30 ... +70	33500	38	1 1/2” NPT	1/8” NPT	34,04	507,57

Flu-Tech Fluid Control Specialists

Valves and Solenoid valves with “Namur” interface series 514

General

The valves 514 series are designed with interface connections in compliance with **NAMUR** standards.
The range includes 5/2 and 4/2 versions with pneumatic or electric actuation and with NPT or BSPT connections.
This series is classified for use in potentially explosive atmospheres (Directive 2014/34/EU).
NAMUR valves have been designed to guarantee flexibility and an increased flow rate capacity exceeding that of traditional spool valves.
Innovative materials guarantee high performances also in critical environment conditions.
The solenoid valves are available with protection classes for zones 2-22, 1-21 solenoids Ex nA, Ex mb, Ex Ia, international approvals IECEx, FM and CSA.

Note:
"Although accurately described, the 4/2 valve actually functions as a 3/2 normally closed valve and should be used as such."

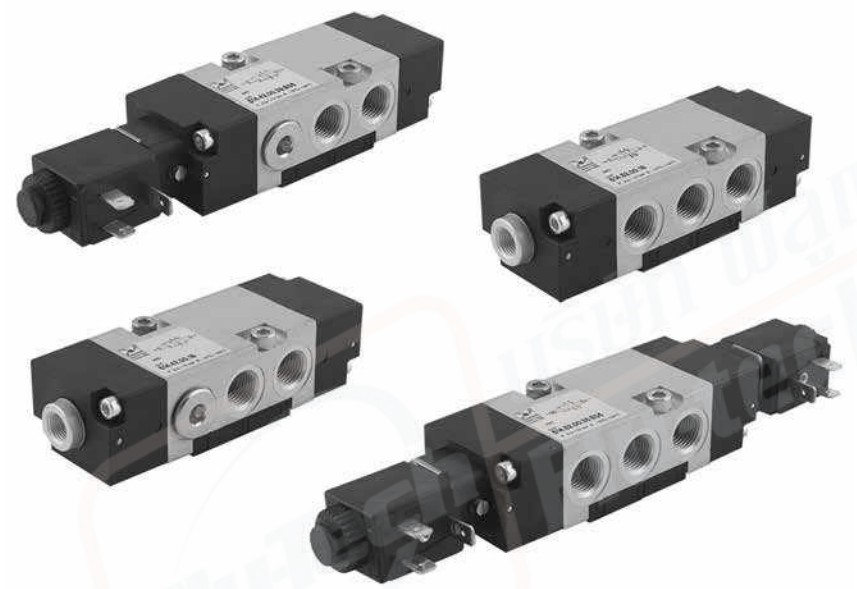

NAMUR interface dimensions:
according to standard (VDI/VDE 3847 July 2003)

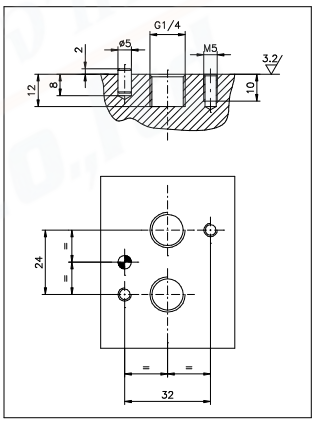

Construction characteristics

Body	Aluminium
Spacers	Technopolymer
Seals	Nitrile rubber
Springs	Stainless steel
Operators	Technopolymer
Spools	Steel
Screws	Zinc coated steel / Stainless steel

PROCESS AUTOMATION TECHNOLOGY

Order codes

[ ] 51 [4] . [52.00.39] . [B04] [ ]

Model
: Standard valve
X : ATEX valve

Connections
4 : G1/4” - supplied with plate
6 : 1/4” NPT - supplied with plate

Function and version
42.00.16: 4 ways - Pneumatic-Differential
42.00.18: 4 ways - Pneumatic-Pneumatic
42.00.19: 4 ways - Pneumatic-Spring
42.00.35: 4 ways - Solenoid-Solenoid
42.00.36: 4 ways - Solenoid-Differential
42.00.39: 4 ways - Solenoid-Spring
52.00.16: 5 ways - Pneumatic-Differential
52.00.18: 5 ways - Pneumatic-Pneumatic
52.00.19: 5 ways - Pneumatic-Spring
52.00.35: 5 ways - Solenoid-Solenoid
52.00.36: 5 ways - Solenoid-Differential
52.00.39: 5 ways - Solenoid-Spring
92.00.16: Universal kit - Pneumatic-Differential
92.00.18: Universal kit - Pneumatic-Pneumatic
92.00.19: Universal kit - Pneumatic-Spring
92.00.35: Universal kit - Solenoid-Solenoid
92.00.36: Universal kit - Solenoid-Differential
92.00.39: Universal kit - Solenoid-Spring

Voltages	Valve marking with ATEX solenoid coil
B00: Ø10 stem without solenoid coil to be used with the following solenoid coils	Ex : CE Ex II 2G Ex h IIC T5 Gb X CE Ex II 2D Ex h IIIC T96°C Db X
B04: 12 VDC - for all models **B05**: 24 VDC - for all models **B09**: 24 VDC (2W) - only for standard model **B56**: 24 VAC (50-60 Hz) - for all models **B57**: 110 VAC (50-60 Hz) - for all models **B58**: 230 VAC (50-60 Hz) - for all models **C04**: 12 VDC - for all models **C05**: 24 VDC - for all models **C09**: 24 VDC (2W) - only for standard model **C56**: 24 VAC (50-60 Hz) - for all models **C57**: 110 VAC (50-60 Hz) - for all models **C58**: 230 VAC (50-60 Hz) - for all models	Ex : CE Ex II 3G Ex h IIC T4 Gc X CE Ex II 3D Ex h IIIC T120°C Dc X IP65
F00: Ø9 stem without solenoid coil to be used with the following solenoid coils	Ex : CE Ex II 2G Ex h IIC T5 Gb X CE Ex II 2D Ex h IIIC T96°C Db X
X05: 24 VDC - only for ATEX model **X56**: 24 VAC (50-60 Hz) - only for ATEX model **X57**: 110 VAC (50-60 Hz) - only for ATEX model **X58**: 230 VAC (50-60 Hz) - only for ATEX model	Ex : CE Ex II 2G Ex h IIC T4 Gb X CE Ex II 2D Ex h IIIC T135°C Db X IP65
MHC: 32 VDC T6 - only for ATEX model complete with connector	Ex : CE Ex II 2G Ex h IIB/IIC T4 Gb X CE Ex II 2D Ex h IIIC T130°C Db X IP65
MH4: 32 VDC T4 - only for ATEX model **MH6**: 32 VDC T6 - only for ATEX model	Ex : CE Ex II 2G Ex h IIB/IIC T4 Gb X
Voltages	**Valve marking with FM solenoid coil**
L04: 12 VDC - only for FM APPROVED model **L05**: 24 VDC - only for FM APPROVED model **L39**: 120 VAC - only for FM APPROVED model **L41**: 240 VAC - only for FM APPROVED model	FM APPROVED

Temperature options
: Standard valve (-10°C ... +50°C)
X : ATEX valve (-20°C ... +40°C) - only with solenoid coils “B##”,“C##” e “X##” (-30°C ... +50°C) - only with solenoid coils “MHC”,“MH#”
: FM APPROVED valve (-20°C ... +50°C) - only with solenoid coils “L##”
LT : Low temperature (-30°C ... +50°C)

Example : 514.52.00.39.B04 : Standard valve, G1/4” connections supplied with plate, solenoid-spring 5 ways, 12 VDC solenoid coil

Pneumatic-Differential

Operational characteristics	
Fluid	Filtered air. No lubrication needed, if applied it shall be continuous.
Maximum working pressure (bar)	10
Temperature °C	See order codes page
Flow rate at 6 bar with Δp=1 (Nl/min)	1100
Orifice size (mm)	8
Working port size	G 1/4" - 1/4" NPT
Cv	1,11
kv	16,66

Ordering code: Ⓜ51Ⓒ.Ⓕ.00.16Ⓞ

Ⓜ	MODEL
	= Standard valves
	X = ATEX valves
Ⓒ	CONNECTIONS
	4 = G1/4"
	6 = 1/4" NPT
Ⓕ	FUNCTION
	42 = 4 ways
	52 = 5 ways
Ⓞ	TEMPERATURE OPTION
	See order codes page

Minimum pilot pressure 2,5 bar
Maximum fittings torque 9 N/m

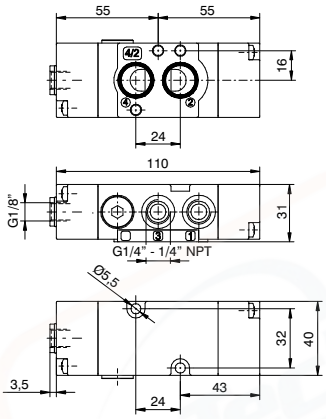

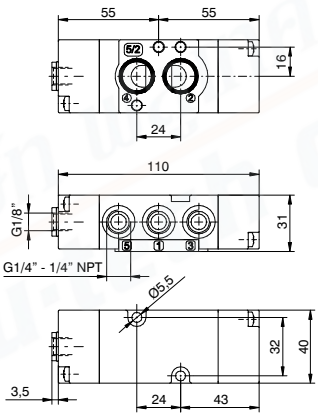

Ⓜ51Ⓒ.42.00.16Ⓞ Weight 240 g

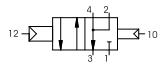

Ⓜ51Ⓒ.52.00.16Ⓞ Weight 235 g

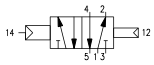

Pneumatic-Pneumatic

Operational characteristics	
Fluid	Filtered air. No lubrication needed, if applied it shall be continuous.
Maximum working pressure (bar)	10
Temperature °C	See order codes page
Flow rate at 6 bar with Δp=1 (Nl/min)	1100
Orifice size (mm)	8
Working port size	G 1/4" - 1/4" NPT
Cv	1,11
kv	16,66

Ordering code: Ⓜ51Ⓒ.Ⓕ.00.18Ⓞ

Ⓜ	MODEL
	= Standard valves
	X = ATEX valves
Ⓒ	CONNECTIONS
	4 = G1/4"
	6 = 1/4" NPT
Ⓕ	FUNCTION
	42 = 4 ways
	52 = 5 ways
Ⓞ	TEMPERATURE OPTION
	See order codes page

Minimum pilot pressure 2,5 bar
Maximum fittings torque 9 N/m

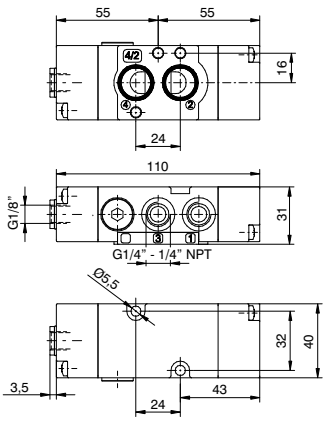

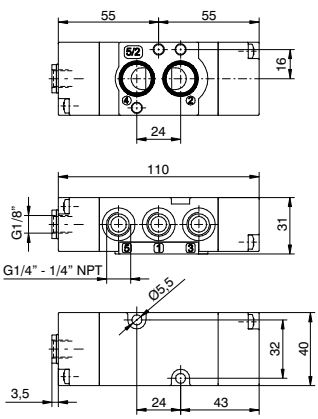

Ⓜ51Ⓒ.42.00.18Ⓞ Weight 240 g

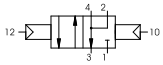

Ⓜ51Ⓒ.52.00.18Ⓞ Weight 235 g

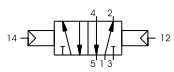

PROCESS AUTOMATION TECHNOLOGY

Pneumatic-Spring

Operational characteristics	
Fluid	Filtered air. No lubrication needed, if applied it shall be continuous.
Maximum working pressure (bar)	10
Temperature °C	See order codes page
Flow rate at 6 bar with Δp=1 (Nl/min)	1100
Orifice size (mm)	8
Working port size	G 1/4" - 1/4" NPT
Cv	1,11
kv	16,66

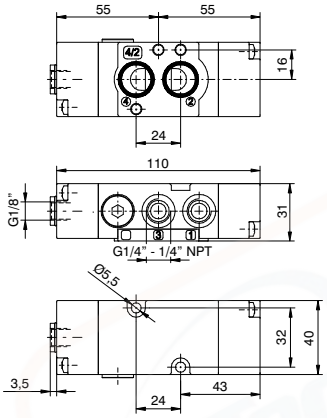

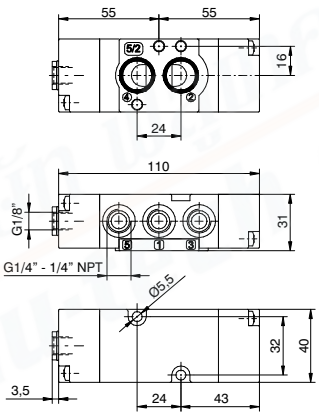

Ordering code: Ⓜ51Ⓒ.Ⓕ.00.19Ⓞ

Ⓜ	MODEL
	= Standard valves
	X = ATEX valves
Ⓒ	CONNECTIONS
	4 = G1/4"
	6 = 1/4" NPT
Ⓕ	FUNCTION
	42 = 4 ways
	52 = 5 ways
Ⓞ	TEMPERATURE OPTION
	See order codes page

Minimum pilot pressure 2,5 bar
Maximum fittings torque 9 N/m

Ⓜ51Ⓒ.42.00.19Ⓞ Weight 240 g

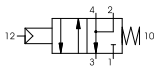

Ⓜ51Ⓒ.52.00.19Ⓞ Weight 235 g

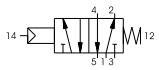

Solenoid-Solenoid

Operational characteristics	
Fluid	Filtered air. No lubrication needed, if applied it shall be continuous.
Maximum working pressure (bar)	10
Temperature °C	See order codes page
Flow rate at 6 bar with Δp=1 (Nl/min)	1100
Orifice size (mm)	8
Working port size	G 1/4" - 1/4" NPT
Cv	1,11
kv	16,66

Ordering code: Ⓜ51Ⓒ.Ⓕ.00.35.ⓉⓄ

Ⓜ	MODEL
	= Standard valves
	X = ATEX valves
Ⓒ	CONNECTIONS
	4 = G1/4"
	6 = 1/4" NPT
Ⓕ	FUNCTION
	42 = 4 ways
	52 = 5 ways
Ⓣ	VOLTAGE
	See order codes page
Ⓞ	TEMPERATURE OPTION
	See order codes page

Minimum pilot pressure 2,5 bar
Maximum fittings torque 9 N/m

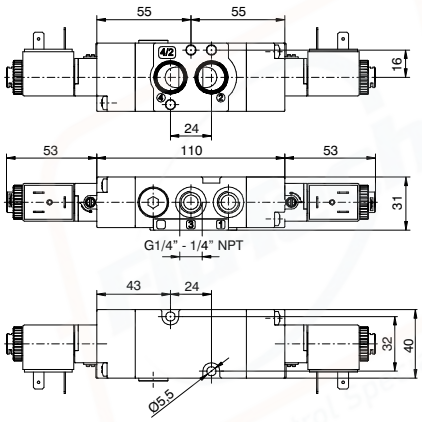

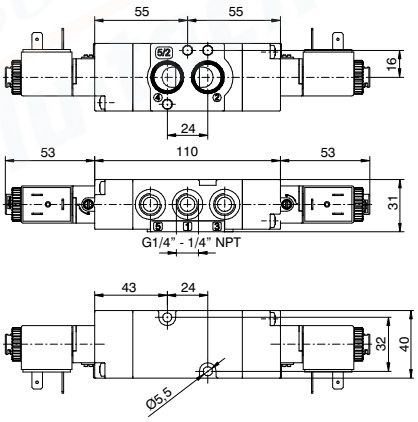

Ⓜ51Ⓒ.42.00.35.ⓉⓄ Weight 410 g

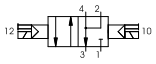

Ⓜ51Ⓒ.52.00.35.ⓉⓄ Weight 405 g

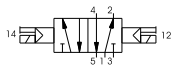

PROCESS AUTOMATION TECHNOLOGY

PROCESS AUTOMATION TECHNOLOGY

Solenoid-Differential

Operational characteristics	
Fluid	Filtered air. No lubrication needed, if applied it shall be continuous.
Maximum working pressure (bar)	10
Temperature °C	See order codes page
Flow rate at 6 bar with Δp=1 (Nl/min)	1100
Orifice size (mm)	8
Working port size	G 1/4" - 1/4" NPT
Cv	1,11
kv	16,66

Ordering code: Ⓜ51Ⓒ.Ⓕ.00.36.ⓉⓄ

Ⓜ	MODEL
	= Standard valves
	X = ATEX valves
Ⓒ	CONNECTIONS
	4 = G1/4"
	6 = 1/4" NPT
Ⓕ	FUNCTION
	42 = 4 ways
	52 = 5 ways
Ⓣ	VOLTAGE
	See order codes page
Ⓞ	TEMPERATURE OPTION
	See order codes page

Minimum pilot pressure 2,5 bar
Maximum fittings torque 9 N/m

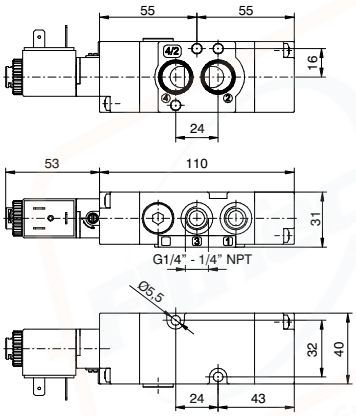

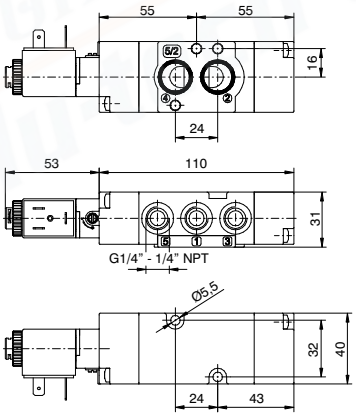

Ⓜ51Ⓒ.42.00.36.ⓉⓄ Weight 330 g

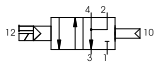

Ⓜ51Ⓒ.52.00.36.ⓉⓄ Weight 325 g

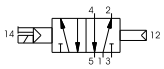

Solenoid-Spring

Operational characteristics	
Fluid	Filtered air. No lubrication needed, if applied it shall be continuous.
Maximum working pressure (bar)	10
Temperature °C	See order codes page
Flow rate at 6 bar with Δp=1 (Nl/min)	1100
Orifice size (mm)	8
Working port size	G 1/4" - 1/4" NPT
Cv	1,11
kv	16,66

Ordering code: Ⓜ51Ⓒ.Ⓕ.00.39.ⓉⓄ

Ⓜ	MODEL
	= Standard valves
	X = ATEX valves
Ⓒ	CONNECTIONS
	4 = G1/4"
	6 = 1/4" NPT
Ⓕ	FUNCTION
	42 = 4 ways
	52 = 5 ways
Ⓣ	VOLTAGE
	See order codes page
Ⓞ	TEMPERATURE OPTION
	See order codes page

Minimum pilot pressure 2,5 bar
Maximum fittings torque 9 N/m

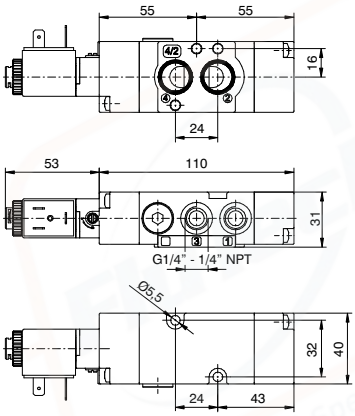

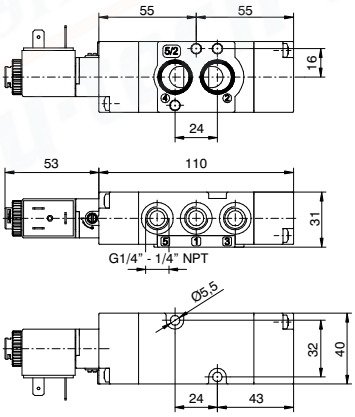

Ⓜ51Ⓒ.42.00.39.ⓉⓄ Weight 330 g

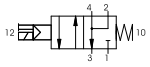

Ⓜ51Ⓒ.52.00.39.ⓉⓄ Weight 325 g

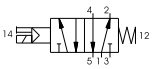

PROCESS AUTOMATION TECHNOLOGY

PROCESS AUTOMATION TECHNOLOGY

Universal kit

Operational characteristics	
Fluid	Filtered air. No lubrication needed, if applied it shall be continuous.
Maximum working pressure (bar)	10
Temperature °C	See order codes page
Flow rate at 6 bar with Δp=1 (Nl/min)	1100
Orifice size (mm)	8
Working port size	G 1/4" - 1/4" NPT
Cv	1,11
kv	16,66

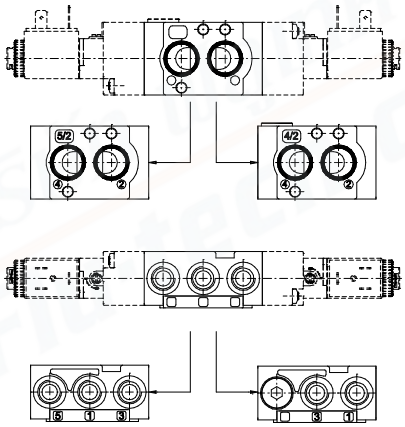

Ordering code: Ⓜ51Ⓒ.92.00.Ⓥ.ⓉⓄ

Ⓜ	MODEL
	= Standard valves
	X = ATEX valves
Ⓒ	CONNECTIONS
	4 = G1/4"
	6 = 1/4" NPT
Ⓥ	VERSION
	16 = Pneumatic - Differential
	18 = Pneumatic - Pneumatic
	19 = Pneumatic - Spring
	35 = Solenoid - Solenoid
	36 = Solenoid - Differential
	39 = Solenoid - Spring
Ⓣ	VOLTAGE
	See order codes page
Ⓞ	TEMPERATURE OPTION
	See order codes page

Minimum pilot pressure 2,5 bar
Maximum fittings torque 9 N/m

To change a 5/2 valve into a 4/2:
Simply replace the bottom plate with the one included in the universal kit (cod. 514.92...) and by plugging port 5

Ⓜ51Ⓒ.92.00.Ⓥ.ⓉⓄ Weight 405 g

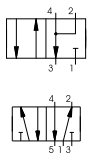

Valves and Solenoid valves with “Namur” interface series 515

General

The valves 515 series are designed with interface connections in compliance with **NAMUR** standards.
The range includes 5/2 version with pneumatic or electric actuation and with NPT or BSPT connections.
This series is classified for use in potentially explosive atmospheres (Directive 2014/34/EU).
NAMUR valves have been designed to guarantee flexibility and an increased flow rate capacity exceeding that of traditional spool valves.
Innovative materials guarantee high performances also in critical environment conditions.
The solenoid valves are available with protection classes for zones 2-22, 1-21 solenoids Ex nA, Ex mb, Ex Ia, international approvals IECEx, FM and CSA.

ATTENTION:

It differs from version 514 because it is supplied without plate.

NAMUR interface dimensions:
according to standard (VDI/VDE 3847 July 2003)

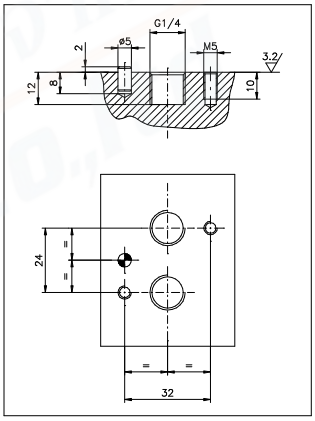

Construction characteristics

Body	Aluminium
Spacers	Technopolymer
Seals	Nitrile rubber
Springs	Stainless steel
Operators	Technopolymer
Spools	Steel
Screws	Zinc coated steel / Stainless steel

PROCESS AUTOMATION TECHNOLOGY

Order codes

[ ] 51 [5] . [52.00.39] . [B04] [ ]

Model
: Standard valve
X : ATEX valve

Connections
5 : G1/4” - supplied without plate
7 : 1/4” NPT - supplied without plate

Function and version
52.00.16: 5 ways - Pneumatic-Differential
52.00.18: 5 ways - Pneumatic-Pneumatic
52.00.19: 5 ways - Pneumatic-Spring
52.00.35: 5 ways - Solenoid-Solenoid
52.00.36: 5 ways - Solenoid-Differential
52.00.39: 5 ways - Solenoid-Spring

Voltages	Valve marking with ATEX solenoid coil
B00: Ø10 stem without solenoid coil to be used with the following solenoid coils	Ex : CE Ex II 2G Ex h IIC T5 Gb X CE Ex II 2D Ex h IIIC T96°C Db X
B04: 12 VDC - for all models **B05**: 24 VDC - for all models **B09**: 24 VDC (2W) - only for standard model **B56**: 24 VAC (50-60 Hz) - for all models **B57**: 110 VAC (50-60 Hz) - for all models **B58**: 230 VAC (50-60 Hz) - for all models **C04**: 12 VDC - for all models **C05**: 24 VDC - for all models **C09**: 24 VDC (2W) - only for standard model **C56**: 24 VAC (50-60 Hz) - for all models **C57**: 110 VAC (50-60 Hz) - for all models **C58**: 230 VAC (50-60 Hz) - for all models	Ex : CE Ex II 3G Ex h IIC T4 Gc X CE Ex II 3D Ex h IIIC T120°C Dc X IP65
F00: Ø9 stem without solenoid coil to be used with the following solenoid coils	Ex : CE Ex II 2G Ex h IIC T5 Gb X CE Ex II 2D Ex h IIIC T96°C Db X
X05: 24 VDC - only for ATEX model **X56**: 24 VAC (50-60 Hz) - only for ATEX model **X57**: 110 VAC (50-60 Hz) - only for ATEX model **X58**: 230 VAC (50-60 Hz) - only for ATEX model	Ex : CE Ex II 2G Ex h IIC T4 Gb X CE Ex II 2D Ex h IIIC T135°C Db X IP65
MHC: 32 VDC T6 - only for ATEX model complete with connector	Ex : CE Ex II 2G Ex h IIB/IIC T4 Gb X CE Ex II 2D Ex h IIIC T130°C Db X IP65
MH4: 32 VDC T4 - only for ATEX model **MH6**: 32 VDC T6 - only for ATEX model	Ex : CE Ex II 2G Ex h IIB/IIC T4 Gb X
Voltages	**Valve marking with FM solenoid coil**
L04: 12 VDC - only for FM APPROVED model **L05**: 24 VDC - only for FM APPROVED model **L39**: 120 VAC - only for FM APPROVED model **L41**: 240 VAC - only for FM APPROVED model	FM APPROVED (c US)

Temperature options
: Standard valve (-10°C ... +50°C)
X : ATEX valve (-20°C ... +40°C) - only with solenoid coils “B##”,“C##” e “X##” (-30°C ... +50°C) - only with solenoid coils “MHC”,“MH#”
: FM APPROVED valve (-20°C ... +50°C) - only with solenoid coils “L##”
LT : Low temperature (-30°C ... +50°C)

Example : 515.52.00.39.B04 : Standard valve, G1/4” connections supplied without plate, solenoid-spring 5 ways, 12 VDC solenoid coil

Pneumatic-Differential

Ordering code: Ⓜ51Ⓒ.52.00.16Ⓞ

Operational characteristics	
Fluid	Filtered air. No lubrication needed, if applied it shall be continuous.
Maximum working pressure (bar)	10
Temperature °C	See order codes page
Flow rate at 6 bar with Δp=1 (Nl/min)	1100
Orifice size (mm)	8
Working port size	G 1/4" - 1/4" NPT
Cv	1,11
kv	16,66

Ⓜ	MODEL	Ⓞ	TEMPERATURE OPTION
	= Standard valves		See order codes page
	X = ATEX valves		
Ⓒ	CONNECTIONS		
	5 = G1/4"		
	7 = 1/4" NPT		

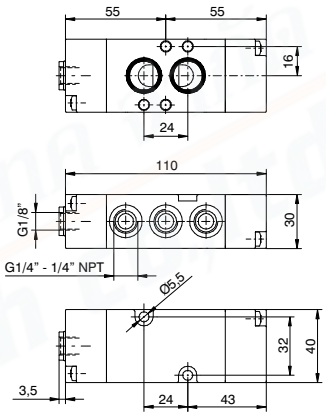

Weight 245 g
Minimum pilot pressure 2,5 bar
Maximum fittings torque 9 N/m

Ⓜ51Ⓒ.52.00.16Ⓞ

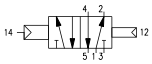

Pneumatic-Pneumatic

Ordering code: Ⓜ51Ⓒ.52.00.18Ⓞ

Operational characteristics	
Fluid	Filtered air. No lubrication needed, if applied it shall be continuous.
Maximum working pressure (bar)	10
Temperature °C	See order codes page
Flow rate at 6 bar with Δp=1 (Nl/min)	1100
Orifice size (mm)	8
Working port size	G 1/4" - 1/4" NPT
Cv	1,11
kv	16,66

Ⓜ	MODEL	Ⓞ	TEMPERATURE OPTION
	= Standard valves		See order codes page
	X = ATEX valves		
Ⓒ	CONNECTIONS		
	5 = G1/4"		
	7 = 1/4" NPT		

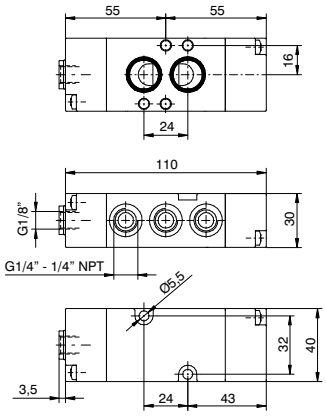

Weight 245 g
Minimum pilot pressure 2,5 bar
Maximum fittings torque 9 N/m

Ⓜ51Ⓒ.52.00.18Ⓞ

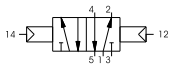

PROCESS AUTOMATION TECHNOLOGY

Pneumatic-Spring

Operational characteristics	
Fluid	Filtered air. No lubrication needed, if applied it shall be continuous.
Maximum working pressure (bar)	10
Temperature °C	See order codes page
Flow rate at 6 bar with Δp=1 (Nl/min)	1100
Orifice size (mm)	8
Working port size	G 1/4" - 1/4" NPT
Cv	1,11
kv	16,66

Ordering code: Ⓜ51Ⓒ.52.00.19Ⓞ

Ⓜ	MODEL	Ⓞ	TEMPERATURE OPTION
	= Standard valves		See order codes page
	X = ATEX valves		
Ⓒ	CONNECTIONS		
	5 = G1/4"		
	7 = 1/4" NPT		

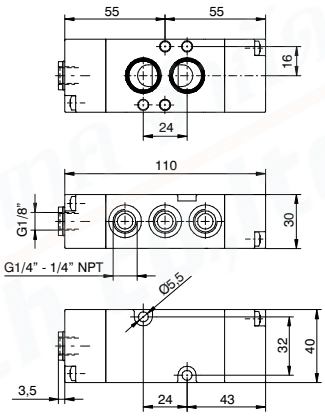

Weight 245 g
Minimum pilot pressure 2,5 bar
Maximum fittings torque 9 N/m

Ⓜ51Ⓒ.52.00.19Ⓞ

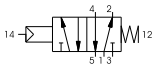

Solenoid-Solenoid

Operational characteristics	
Fluid	Filtered air. No lubrication needed, if applied it shall be continuous.
Maximum working pressure (bar)	10
Temperature °C	See order codes page
Flow rate at 6 bar with Δp=1 (Nl/min)	1100
Orifice size (mm)	8
Working port size	G 1/4" - 1/4" NPT
Cv	1,11
kv	16,66

Ordering code: Ⓜ51Ⓒ.52.00.35.ⓉⓄ

Ⓜ	MODEL	Ⓞ	TEMPERATURE OPTION
	= Standard valves		See order codes page
	X = ATEX valves		
Ⓒ	CONNECTIONS		
	5 = G1/4"		
	7 = 1/4" NPT		
Ⓣ	VOLTAGE		
	See order codes page		

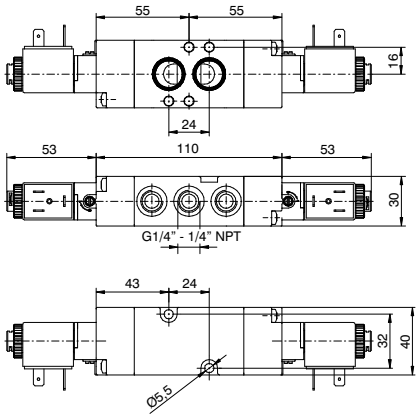

Weight 415 g
Minimum pilot pressure 2,5 bar
Maximum fittings torque 9 N/m

Ⓜ51Ⓒ.52.00.35.ⓉⓄ

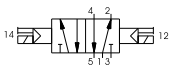

Solenoid-Differential

Ordering code: Ⓜ51Ⓒ.52.00.36.ⓉⓄ

Operational characteristics	
Fluid	Filtered air. No lubrication needed, if applied it shall be continuous.
Maximum working pressure (bar)	10
Temperature °C	See order codes page
Flow rate at 6 bar with Δp=1 (Nl/min)	1100
Orifice size (mm)	8
Working port size	G 1/4" - 1/4" NPT
Cv	1,11
kv	16,66

Ⓜ	MODEL	Ⓞ	TEMPERATURE OPTION
	= Standard valves		See order codes page
	X = ATEX valves		
Ⓒ	CONNECTIONS		
	5 = G1/4"		
	7 = 1/4" NPT		
Ⓣ	VOLTAGE		
	See order codes page		

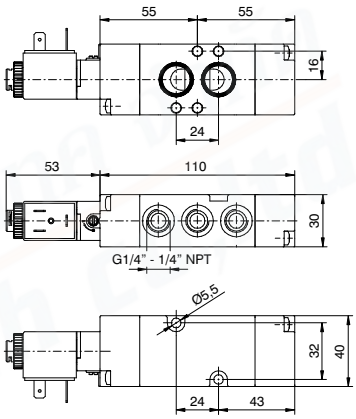

Weight 330 g
Minimum pilot pressure 2,5 bar
Maximum fittings torque 9 N/m

Ⓜ51Ⓒ.52.00.36.ⓉⓄ

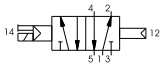

Solenoid-Spring

Ordering code: Ⓜ51Ⓒ.52.00.39.ⓉⓄ

Operational characteristics	
Fluid	Filtered air. No lubrication needed, if applied it shall be continuous.
Maximum working pressure (bar)	10
Temperature °C	See order codes page
Flow rate at 6 bar with Δp=1 (Nl/min)	1100
Orifice size (mm)	8
Working port size	G 1/4" - 1/4" NPT
Cv	1,11
kv	16,66

Ⓜ	MODEL	Ⓞ	TEMPERATURE OPTION
	= Standard valves		See order codes page
	X = ATEX valves		
Ⓒ	CONNECTIONS		
	5 = G1/4"		
	7 = 1/4" NPT		
Ⓣ	VOLTAGE		
	See order codes page		

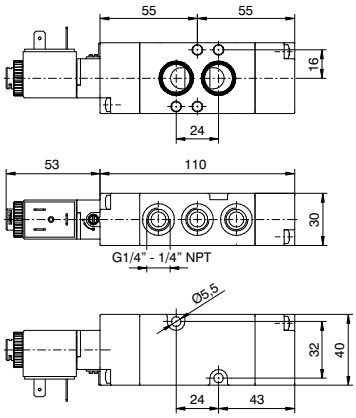

Weight 330 g
Minimum pilot pressure 2,5 bar
Maximum fittings torque 9 N/m

Ⓜ51Ⓒ.52.00.39.ⓉⓄ

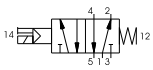

Solenoid coil 22 mm Ø10, type MB

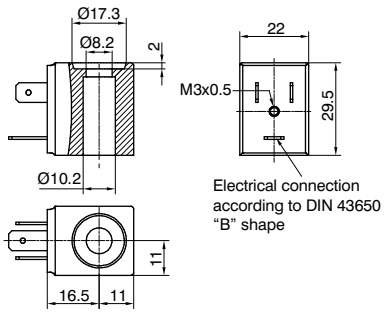

Ordering code

MBⓉ

	VOLTAGE
	4: 12 VDC
	5: 24 VDC
Ⓣ	9: 24 VDC (2W)
	56: 24 VAC (50-60 Hz)
	57: 110 VAC (50-60 Hz)
	58: 230 VAC (50-60 Hz)

Operational characteristics

Class of insulation	Tolerance on voltage	IP Rating with connector fitted	Electrical connection	Weight (gr.)
F	±10%	IP65	DIN43650 B industrial	53

Solenoid coil 22 mm Ø10, type XMB

CE Ex II 3GD Ex nA IIC T5, T4 Gc
CE Ex II 3GD Ex tc IIIC T85°C, T120°C Dc IP65

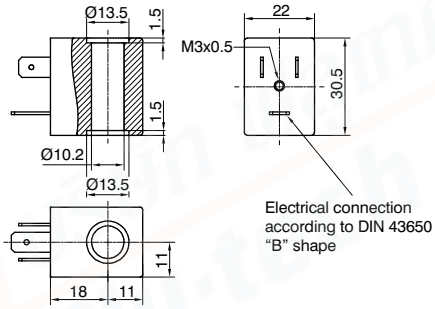

Ordering code

XMBⓉ

	VOLTAGE
	4: 12 VDC
	5: 24 VDC
Ⓣ	56: 24 VAC (50-60 Hz)
	57: 110 VAC (50-60 Hz)
	58: 230 VAC (50-60 Hz)

Operational characteristics

Class of insulation	Tolerance on voltage	IP Rating with connector fitted	Electrical connection	Weight (gr.)
F	±10%	IP65	DIN43650 B industrial	54

Solenoid coil 30 mm Ø10, type MC

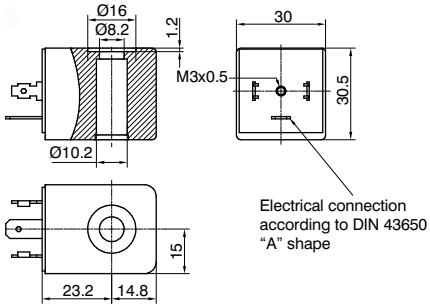

Ordering code

MCⓉ

	VOLTAGE
	4: 12 VDC
	5: 24 VDC
Ⓣ	9: 24 VDC (2W)
	56: 24 VAC (50-60 Hz)
	57: 110 VAC (50-60 Hz)
	58: 230 VAC (50-60 Hz)

Operational characteristics

Class of insulation	Tolerance on voltage	IP Rating with connector fitted	Electrical connection	Weight (gr.)
F	±10%	IP65	DIN43650 A	113

Solenoid coil 30 mm Ø10, type XMC

CE Ex II 3GD Ex nA IIC T5, T4 Gc
CE Ex II 3GD Ex tc IIIC T85°C, T120°C Dc IP65

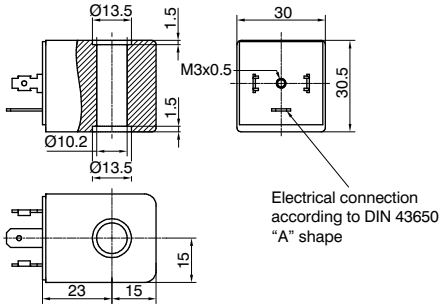

Ordering code

XMCⓉ

	VOLTAGE
	4: 12 VDC
	5: 24 VDC
Ⓣ	56: 24 VAC (50-60 Hz)
	57: 110 VAC (50-60 Hz)
	58: 230 VAC (50-60 Hz)

Operational characteristics

Class of insulation	Tolerance on voltage	IP Rating with connector fitted	Electrical connection	Weight (gr.)
F	±10%	IP65	DIN43650 A	117

Solenoid coil 30 mm Ø10, type XME

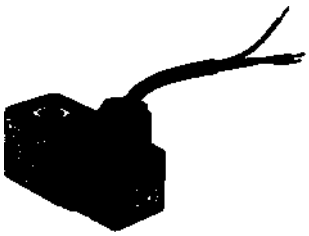

II 2GD Ex mb IIC T6, T5, T4 Gb
II 2GD Ex mb IIIC T85°C, T100°C, T135°C Db IP65

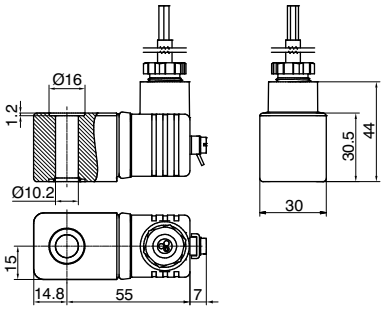

Ordering code

XMEⓉ

	VOLTAGE
	5: 24 VDC
Ⓣ	56: 24 VAC (50-60 Hz)
	57: 110 VAC (50-60 Hz)
	58: 230 VAC (50-60 Hz)

Operational characteristics				
Class of insulation	Tolerance on voltage	IP Rating with connector fitted	Electrical connection	Weight (gr.)
H	±10%	IP65	Cavo 3 mt.	325

Solenoid coil 30 mm Ø9, type XMHB EX ia

II 3G Ex nA IIC T5 Gc
II 3D Ex tc IIIC T95°C Dc IP65

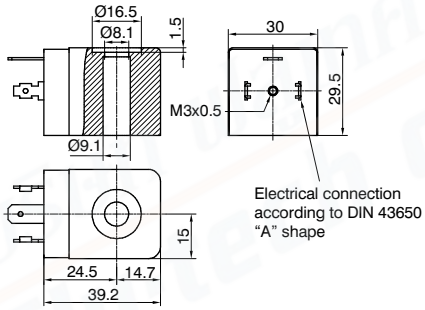

Ordering code

XMHBⓉ

	VOLTAGE
Ⓣ	4: 32 VDC T4
	6: 32 VDC T6

Operational characteristics				
Class of insulation	Tolerance on voltage	IP Rating with connector fitted	Electrical connection	Weight (gr.)
F	±10%	IP65	DIN43650 A	111

Solenoid coil 30 mm Ø9, type XMHC EX ia 32 VDC T6

II 2G Ex ia IIB/IIC T6, T4 Ga
II 2D Ex t IIIC T80°C, T130°C Db IP65

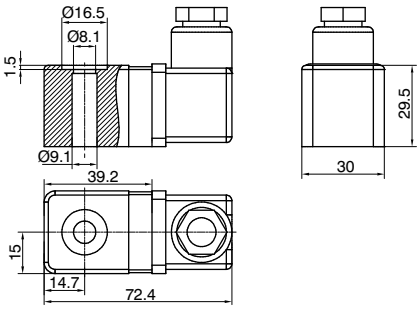

Ordering code

XMHC

Operational characteristics			
Class of insulation	Tolerance on voltage	Grado di protezione	Weight (gr.)
F	±10%	IP65	136

Solenoid coil 36 mm Ø9, type ML FM APPROVED

Class I, Division 2, Groups A, B, C, D, T4, Ta=60°C
Suitable for Class II, III, Division 2, Groups E, F, G, T4, Ta=60°C
hazardous (classified) locations.

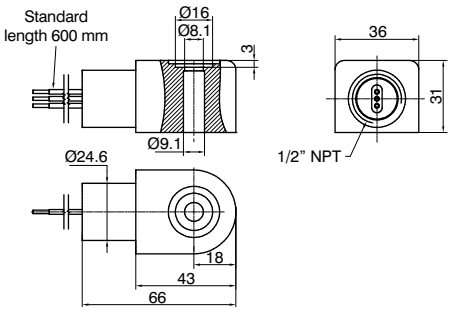

Ordering code

MLⓉ

	VOLTAGE
	4: 12 VDC
Ⓣ	5: 24 VDC
	39: 120 VAC
	41: 240 VAC

Operational characteristics				
Class of insulation	Tolerance on voltage	IP Rating with connector fitted	Electrical connection (mm)	Weight (gr.)
H	±10%	IP65	600	150

Connector 22 mm ATEX DIN43650 B industrial

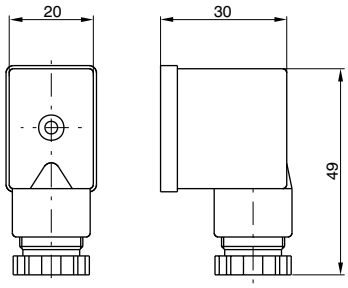

Ordering code
X305.11.00
Ex

Weight gr. 21

Connector 30 mm ATEX DIN43650 A

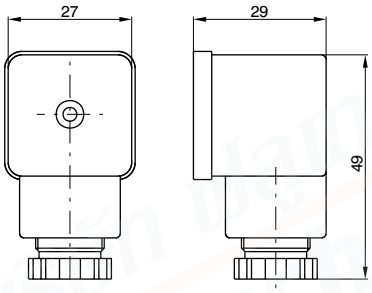

Ordering code
X300.11.00
Ex

Weight gr. 25

30 mm solenoid base adaptor

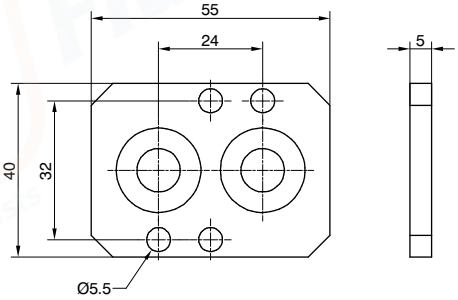

Ordering code
514.05

Weight gr. 25

บริษัท ฟลูเทค จำกัด
FLU-TECH CO.,LTD
845/3-4 หมู่ 3 ถ.เทพารักษ์ ต.เทพารักษ์ อ.เมือง จ.สมุทรปราการ 10270
845/3-4 Thepharak RD., T.Thepharak, A.Muang, Samutprakarn 10270 THAILAND
Tel. 0 2384 6060, Fax 0 2384 5701, Email : sales@flutech.co.th, www.flutech.co.th