DATA SHEET

Type MS01

bürkert
FLUID CONTROL SYSTEMS

pH Sensor Cube

- Fully compatible with büS systems and a wide range of further analysis sensor cubes
- Sensor: MEMS ISFET technology
- Hot swap compatible for exchanging the sensor cube during operation
- Minimal sample water consumption
- Available in 2 versions: standard and with drinking water approval (ACS)

Product variants described in the data sheet may differ from the product presentation and description.

Can be combined with

Type 8905
Online Analysis System

Type 8920
Bürkert Communicator

Type description

This sensor cube measures the pH value and is designed for operation on the fluidic backplane in the device Type 8905 Online Analysis System.

The pH sensor cube contains an ISFET measuring cell, which is based on the MEMS technology (micro electro-mechanical system). The measurement gives the pH value of the sample water.

The electrical and fluidic connections are made via the backplane of the system. The sensor cube communicates with the system via the digital büS interface, allowing fully automatic login to the online analysis system. If the sensor is plugged into the system, it automatically logs on to the büS and can be parameterised according to customer requirements.

The sensor cube is available in 2 variants. The standard version provides protection against biological growth on the reference electrode and is recommended for applications with no or very low chlorine in the water. The drinking water version is without anti-fouling equipment and is mainly required in applications with drinking water approval.

DTS 1000220806 EN Version: P Status: RL (released | freigegeben | validé) printed: 18.02.2022

Table of contents

DTS 1000220806 EN Version: P Status: RL (released | freigegeben | validé) printed: 18.02.2022

1. General technical data

Product properties	
Material	
Please make sure the device materials are compatible with the fluid you are using. Detailed information can be found in chapter "2.1. Chemical Resistance Chart – Bürkert resistApp" on page 4.	
Housing	PPE+PS
Lever	Zamak, painted
Seals	EPDM
Dimensions	Detailed information can be found in chapter "3. Dimensions" on page 5.
pH sensor	ISFET (Ion Sensitive Field Effect Transistor)
Temperature sensor	Pt1000 Class B
Electrolyte (reference electrode)	• Standard version: Ag/AgCl, 3 mol KCl with biocide for use without chlorine (<0.2 ppm) • Drinking water version: Ag/AgCl, 3 mol KCl without biocide
Compatibility	With Online Analysis System Type 8905 (the electrical and fluidic contact is made via backplane system.) Detailed information can be found in the data sheet of the online analysis system, see **data sheet Type 8905** ▶ for more information.
Measuring range	pH 4…pH 9 (further measuring ranges on request)
Maintenance	12 months nominal, depending on the water quality
Performance data	
pH measurement	
Measuring range resolution	pH 0.02
Measurement deviation	± pH 0.1
Linearity	± pH 0.05
Repeatability	± pH 0.05
Response time (t_{90})	<10 s
Temperature measurement	0…+50 °C (+32…+122 °F)
Electrical data	
Operating voltage	24 V DC through the backplane of the system Type 8905 via büS
Power consumption	0.8 VA
Media data	
Fluid	• Water without particles: drinking water, industrial water • Conductivity ≥ 100 µS/cm • For Cl < 0.2 ppm use antifouling cartridge
Sample water	
Temperature	+3…+40 °C (+37…+104 °F)
Pressure	PN3
Flow rate	>6 l/h
Process/Port connection & communication	
Process connection	Via pinch valve in the fluidic backplane of the Type 8905 Detailed information can be found in the data sheet of t the Online Analysis System, see **data sheet Type 8905** ▶ for more information.
Electrical connection	Spring contacts in the fluidic backplane of the Type 8905, which is connected to a büS System Detailed information can be found in the data sheet of t the Online Analysis System, see **data sheet Type 8905** ▶ for more information.
Data transfer	
Internal communication	Through büS (Bürkert bus, CANopen protocol)
External communication by status LED	According to NAMUR NE 107
Approvals and Certificates	
Standards	
Degree of protection according to IEC/ EN 60529	• IP65, when plugged in the fluidic backplane • IP20, as standalone product

DTS 1000220806 EN Version: P Status: RL (released | freigegeben | validé) printed: 18.02.2022

Directives	
CE directives	The applied standards, which verify conformity with the EU Directives, can be found on the EU Type Examination Certificate and/or the EU Declaration of conformity (if applicable).
Environment and installation	
Ambient temperature	
Operating	0…+40 °C (+32…+104 °F)
Storage and transport	For empty/purged sensor cube • -10…+60 °C (+14…+140 °F) without the reference electrode • +3…+40 °C (+37…+104 °F) with the reference electrode
Relative air humidity	≤90 %, without condensation
Height above sea level	Max. 2000 m
Operating condition	Continuous
Equipment mobility	Fixed
Application range	Indoor and outdoor (Protect the device against electromagnetic interference, ultraviolet rays and, when installed outdoors, against the effects of climatic conditions)
Installation category	Category I according to UL/EN 61010-1
Pollution degree	Degree 2 according to UL/EN 61010-1

2. Materials

2.1. Chemical Resistance Chart – Bürkert resistApp

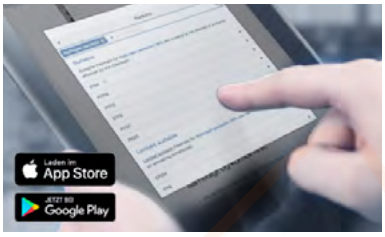

Bürkert resistApp – Chemical Resistance Chart

You want to ensure the reliability and durability of the materials in your individual application case? Verify your combination of media and materials on our website or in our resistApp.

Start Chemical Resistance Check

3. Dimensions

Note:
Dimensions in mm

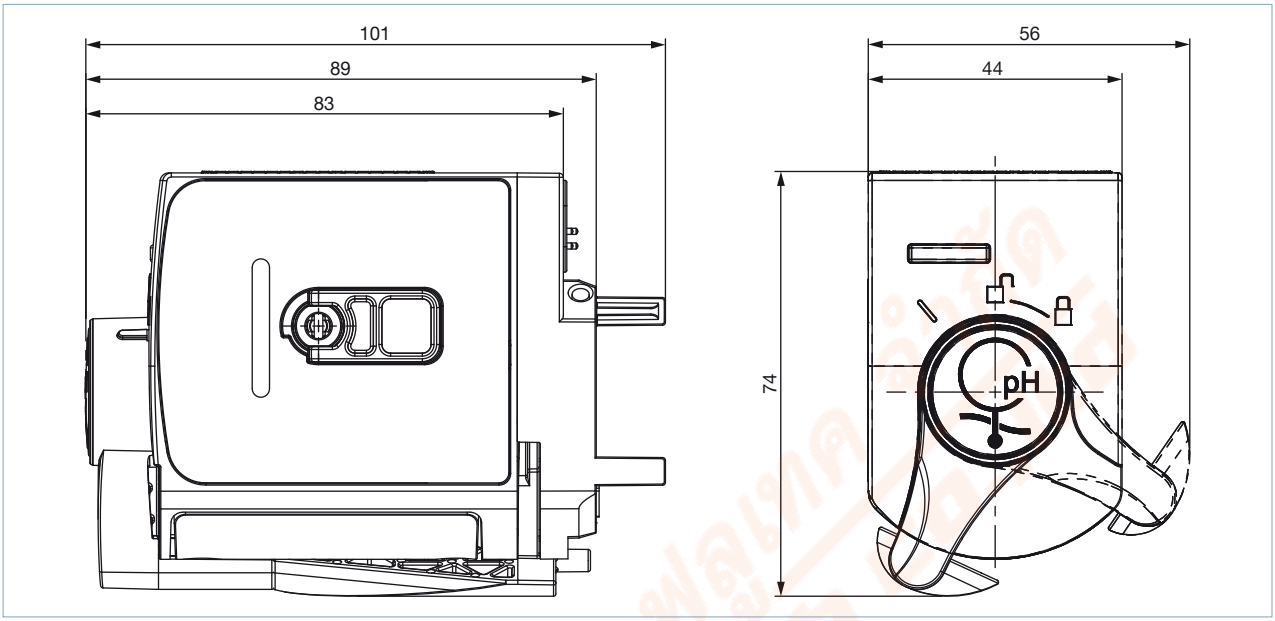

4. Product installation

4.1. Installation notes

Note:

- The sensor cube is designed for use with the online analysis system, Type 8905. The sensor cube is simply plugged into the backplane in Type 8905.
- It is also possible to mount the backplane individually on a DIN rail.

See **data sheet Type 8905** ▶ Online Analysis System for more information.

Installation examples	
Product mounted in a housing for the Online analysis system Type 8905. • pH sensor cube Type MS01 • Housing Type 8905 with display Type ME21 and controller Type ME25 	**Product without housing mounted of the backplane on standard rail (TS35).** 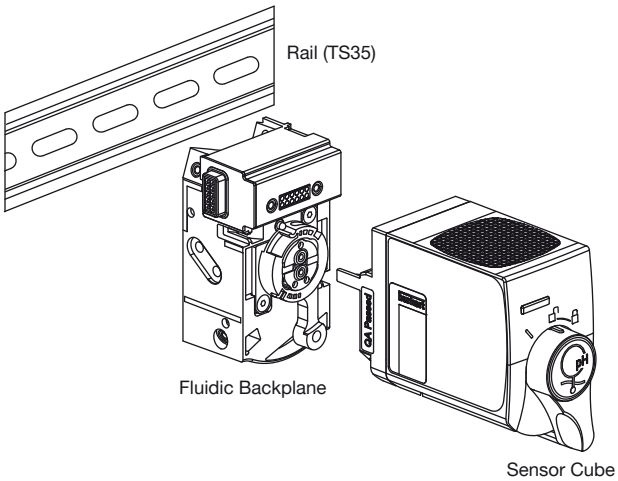

5. Product design and assembly

5.1. Product features

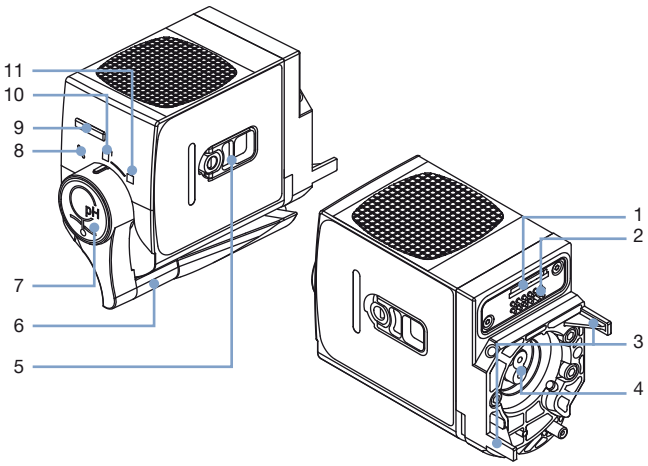

Product without housing

No.	Element
1	Slot micro-SIM card (for configuration data)
2	Electrical interface
3	Guide pins
4	Fluid connections
5	Lever to: • lock / unlock the product • carry out maintenance operations
6	Housing of the external reference electrode
7	Push button for unlocking
8	Maintenance position
9	Sensor cube Status LED
10	Unlocked position
11	Locked position

6. Ordering information

6.1. Bürkert eShop – Easy ordering and quick delivery

Bürkert eShop – Easy ordering and fast delivery

You want to find your desired Bürkert product or spare part quickly and order directly? Our online shop is available for you 24/7. Sign up and enjoy all the benefits.

Order online now

6.2. Bürkert product filter

Bürkert product filter – Get quickly to the right product

You want to select products comfortably based on your technical requirements? Use the Bürkert product filter and find suitable articles for your application quickly and easily.

Try out our product filter

DTS 1000220806 EN Version: P Status: RL (released | freigegeben | validé) printed: 18.02.2022

6.3. Ordering chart

Note:
The pH sensor cube must be operated within a system.

Please refer to the order information for Online Analysis System Type 8905, see **data sheet Type 8905** ▶ or contact your Bürkert representative.

Description	Article no.
pH sensor cube	
Drinking water version (without anti-fouling), ACS approval	567624
Standard version (with anti-fouling)	570691

6.4. Ordering chart accessories

Description	Article no.
Buffer solution, 50 ml	
pH 5 (+20 °C)	806698
pH 7 (+20 °C)	806699
pH 9 (+20 °C)	806700
Reference electrode	
Drinking water version (without anti-fouling)	563705
Standard version (with anti-fouling)	570699
Replacement part set	
Measurement cell	568038

DTS 1000220806 EN Version: P Status: RL (released | freigegeben | validé) printed: 18.02.2022