bürkert
FLUID CONTROL SYSTEMS

Flowmeter with oval rotors

- For highly viscous fluids
- Value indication, monitoring, transmitting, On/Off control and batch control in combination with different transmitters

Product variants described in the data sheet may differ from the product presentation and description.

Can be combined with

Type 8025
Insertion flowmeter or batch controller with paddle wheel and flow transmitter or remote batch controller

Type 8619
multiCELL - Multi-channel and multi-function transmitter/controller

Type 8611
eCONTROL - Universal controller

Type 8802
ELEMENT continuous control valve systems - overview

Type description

This sensor is specially designed for measurement or batch control of highly viscous fluids like glue, honey or oil. It allows an easy connection to transmitters like types 8025, 8611 and 8619 for more functionality.

The design of this low flow sensor is based on the oval rotor principle. This has proven to be a reliable and highly accurate volumetric method of measuring flow. Exceptional repeatability and high accuracy over a wide range of viscosities and flowrates are features of this design. The low pressure drop and high pressure rating make it suitable for gravity and pump (in-line) applications and many others.

All sensors provide Open Collector NPN frequency output and frequency output on Reed contact via 1-meter 5-wire cable.

DTS 1000282310 EN Version: G Status: RL (released | freigegeben | validé) printed: 15.07.2021

Table of contents

DTS 1000282310 EN Version: G Status: RL (released | freigegeben | validé) printed: 15.07.2021

1. General Technical Data

Product properties	
Material	
Please make sure the device materials are compatible with the fluid you are using. Detailed information can be found in chapter "3.1. Chemical Resistance Chart – Bürkert resistApp" on page 4.	
Non wetted parts	
Electronic module	PP (20 % glass fiber)
Tag plate	Aluminium
Wetted parts	
Body	Aluminium, stainless steel 316L (1.4401)
Rotor	Stainless steel 316L (1.4401)
Shaft	Stainless steel 316L (1.4401)
Seal	FEP/PTFE
Dimensions	Detailed information can be found in chapter "4. Dimensions" on page 5.
Compatibility	With 8025 Universal transmitter/batch controller, 8611 eCONTROL Universal controller or 8619 multiCELL transmitter/Controller Detailed information can be found in the respective technical data sheets, see **data sheets Type 8025 ▸**, **Type 8611 ▸**, **Type 8619 ▸** for more information.
Measuring range	0.5…500 l/h (0.13…132 gph) (depends on the version)
Type of sensor	Hall effect (Transistor output) or Reed contact (reed switch outpu)
Standard K-factor	• For flow range 0.5…120 l/h: 1000 pulses/l • For flow range 15…500 l/h: 400 pulses/l
Performance data	
Measurement deviation	• ±1 % of Reading (if "standard" K-factor is used) • ±0.5 % of Reading (if "specific" K-factor is used, on label of the product)
Repeatability	≤0.03 % of Reading
Electrical data	
Operating voltage	4.5…24 V DC
Current consumption	≤9 mA (Hall effect sensor)
Output signal	
Hall effect sensor	• Frequency on open collector, NPN, max. 25 mA • 4.5…24 V DC • Recommended load: 1.8 KΩ Pull up at 24 V DC
Reed contact	• Frequency • Switching voltage: 30 V DC, • Max. current: 0.5 A
Media data	
Fluid temperature	• With aluminium body: -20…+80 °C (-4…+176 °F) • With stainless steel body: -20…+120 °C (-4…+248 °F)
Fluid pressure	• With aluminium body: 55 bar (798 PSI) • With stainless steel body: 55 bar (798 PSI)
Dynamic viscosity η	1 Pa.s. max. (higher on request)
Maximum particle size	75 µm To prevent damage from dirt or foreign matter, we strongly recommend the installation of a 75 µm (200 mesh) strainer as close as possible to the inlet side of the meter.
Process/Port connection & communication	
Process connection	Thread ⅛"; ¼" (G or NPT)
Electrical connection	• 5-wire cable • 1 m length
Approvals and certificates	
Standards	
Protection class	IP67, IP66 according to IEC/EN 60529, NEMA 6 according to NEMA 250

DTS 1000282310 EN Version: G Status: RL (released | freigegeben | validé) printed: 15.07.2021

Directives	
CE directives	The applied standards, which verify conformity with the EU Directives, can be found on the EU Type Examination Certificate and/or the EU Declaration of conformity (if applicable)
Pressure equipment directives	Complying with Article 4, Paragraph 1 of 2014/68/EU directive Detailed information on the pressure equipment directive can be found in chapter "2.1. Pressure Equipment Directive" on page 4.
Environment and installation	
Ambient temperature	Operation and storage: -15…+60 °C (+5…+140 °F)
Relative air humidity	≤85 %, without condensation
Height above sea level	Max. 2000 m
Operating condition	Continuous
Device mobility	Fixed
Application range	Indoor and outdoor (protect the device against electromagnetic interference, ultraviolet rays and, when installed outdoors, against the effects of climatic conditions)
Installation category	Category I according to UL/EN 61010-1
Pollution degree	Degree 2 according to UL/EN 61010-1

DTS 1000282310 EN Version: G Status: RL (released | freigegeben | validé) printed: 15.07.2021

2. Approvals

2.1. Pressure Equipment Directive

The device conforms to Article 4, Paragraph 1 of the Pressure Equipment Directive 2014/68/EU under the following conditions:

Device used on a pipe

Note:

- The data in the table is independent of the chemical compatibility of the material and the fluid.
- PS = maximum admissible pressure, DN = nominal diameter of the pipe

Type of fluid	Conditions
Fluid group 1, Article 4, Paragraph 1.c.i	DN ≤25
Fluid group 2, Article 4, Paragraph 1.c.i	DN ≤32 or PS*DN ≤1000
Fluid group 1, Article 4, Paragraph 1.c.ii	DN ≤25 or PS*DN ≤2000
Fluid group 2, Article 4, Paragraph 1.c.ii	DN ≤200 or PS ≤10 or PS*DN ≤5000

3. Materials

3.1. Chemical Resistance Chart – Bürkert resistApp

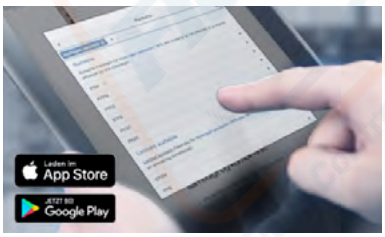

Bürkert resistApp – Chemical Resistance Chart

You want to ensure the reliability and durability of the materials in your individual application case? Verify your combination of media and materials on our website or in our resistApp.

Start Chemical Resistance Check

3.2. Material specifications

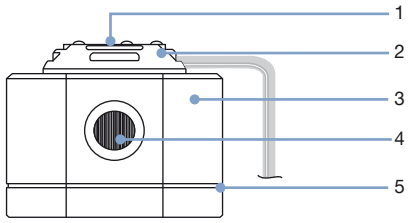

No.	ELEMENT	Material
1	Tag plate	Aluminium
2	Electronic module	PP (20 % glass fiber)
3	Body	Aluminium or stainless steel 316L (1.4401)
4	Rotor and Shaft	Stainless steel 316L (1.4401)
5	Seal	FEP/PTFE

4. Dimensions

Note:
Dimensions in mm

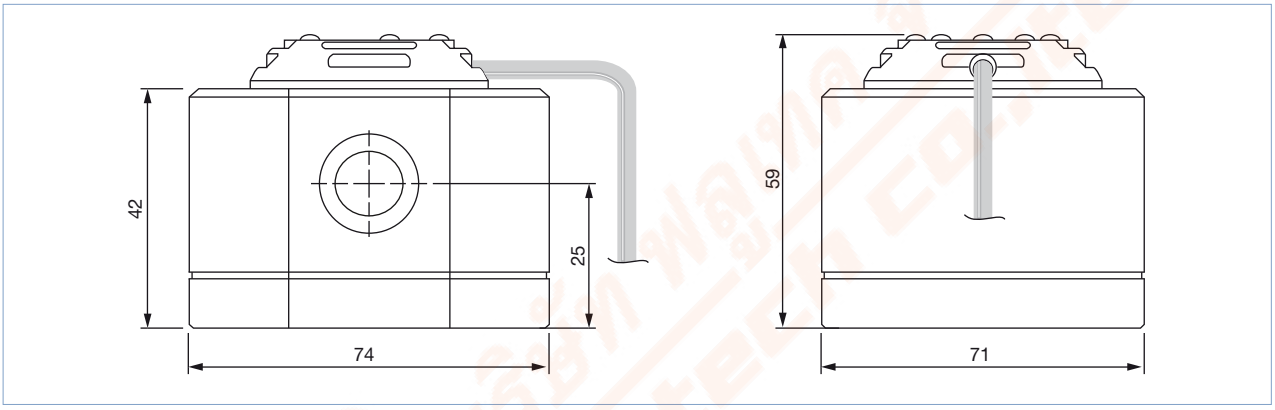

5. Product installation

5.1. Installation notes

The flowmeter is not designed for gas and steam flow measurement.

The flowmeter can be installed in any orientation as long as **the rotor shafts are always in a horizontal plane**.

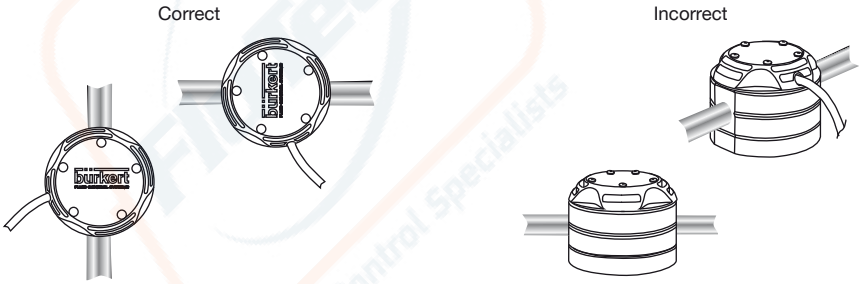

The pipe must be filled with liquid and free from air bubbles. Avoid air purge of the system which would cause damages and to prevent damage from dirt or foreign matter, we strongly recommend the installation of a 75 µm strainer as close as possible to the inlet side of the meter.

DTS 1000282310 EN Version: G Status: RL (released | freigegeben | validé) printed: 15.07.2021

6. Product operation

6.1. Measuring principle

When liquid flows through the pipe, the rotors turn. This rotation produces a measuring signal in the associated hall sensor. The frequency and amplitude are proportional to the flow. The volume of the fluid being transferred in this way is exactly determined through the sensor geometry.

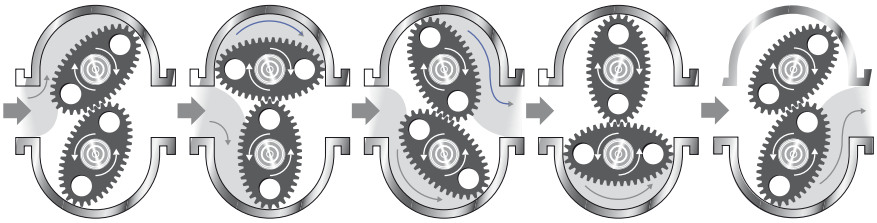

A conversion coefficient, specific to each meter size, enables the conversion of this frequency into a flow rate. The standard K-factor depending on the meter size is available in the instruction manual of the flowmeter 8077, or to improve the measurement deviation, a specific K-factor is given with each device on its label.

7. Ordering information

7.1. Bürkert eShop – Easy ordering and quick delivery

Bürkert eShop – Easy ordering and fast delivery

You want to find your desired Bürkert product or spare part quickly and order directly? Our online shop is available for you 24/7. Sign up and enjoy all the benefits.

Order online now

7.2. Bürkert product filter

Bürkert product filter – Get quickly to the right product

You want to select products comfortably based on your technical requirements? Use the Bürkert product filter and find suitable articles for your application quickly and easily.

Try out our product filter

7.3. Ordering chart

Process connection	Flow range		Body material	Max. pressure	Rotor/shaft material	Seal	Article no.
	>5 mPa.s	<5 mPa.s					
G ⅛"	0.5…120 l/h (0.13…31.70 gph)	2[1.)]…120 l/h (0.53…26.4 gph)	Aluminium	55 bar	Stainless steel	FEP/PTFE	567202
			Stainless steel	55 bar	Stainless steel	FEP/PTFE	567203
NPT ⅛"	0.5…120 l/h (0.13…31.70 gph)	2[1.)]…120 l/h (0.53…26.4 gph)	Aluminium	55 bar	Stainless steel	FEP/PTFE	567204
			Stainless steel	55 bar	Stainless steel	FEP/PTFE	567205
G ¼"	0.5…120 l/h (0.13…31.70 gph)	2[1.)]…120 l/h (0.53…26.4 gph)	Stainless steel	55 bar	Stainless steel	FEP/PTFE	567206
	15…500 l/h (4.00…132 gph)	40…500 l/h (10.56…132 gph)	Stainless steel	55 bar	Stainless steel	FEP/PTFE	567207
	15…500 l/h for high viscosity[2.)]		Stainless steel	55 bar	Stainless steel	FEP/PTFE	567208
NPT ¼"	0.5…120 l/h (0.13…31.70 gph)	2[1.)]…120 l/h (0.53…26.4 gph)	Stainless steel	55 bar	Stainless steel	FEP/PTFE	567209
	15…500 l/h (4.00…132 gph)	40…500 l/h (10.56…132 gph)	Stainless steel	55 bar	Stainless steel	FEP/PTFE	567210
	15…500 l/h for high viscosity[2.)]		Stainless steel	55 bar	Stainless steel	FEP/PTFE	567211

1.) For non-lubricating fluids = 6 l/hr (e.g. Water...)

2.) > 1 Pa.s.

7.4. Ordering chart accessories

Description	Article no.
Set of two rotors in stainless steel for measuring range 0.5…120 l/h	567766
Set of two rotors in stainless steel for measuring range 15…500 l/h	567767
FEP/PTFE seal for measuring range 0.5…120 l/h	567768
FEP/PTFE seal for measuring range 15…500 l/h	567769
Set of plastic cap with hall sensor and Reed contact	567770

DTS 1000282310 EN Version: G Status: RL (released | freigegeben | validé) printed: 15.07.2021