WWW.FLUTECH.CO.TH

ADD FRIEND @flutech.co.th

Authorized Distributor

Flu-Tech บริษัท ฟลูเทค จำกัด Flu-tech co.,ltd

Fluid Control Specialists

Mini Float Level Switch

FineTek

Innovation · Quality · Sharing

PRODUCT INTRODUCTION

■ INTRODUCTION

The reed switch relies on two basic scientific principles namely: buoyancy and magnetism. Buoyancy causes the float (which contains a magnet) to rise with the liquid and magnetism helps open and close the switch.
Since this product's this product has been introduced to the market, it has seen significant improvement and advances with regards to convenience, safety and lowering costs.

The float switches are extremely compact, simple and are easy to install on any small locations.

These switches are not affected by electrical interference and can withstand chemicals, high temperatures and pressures if the correct material of float switch is selected.

■ LIQUID PROPERTIES AND FLOATS

The switch's float should always have a specific gravity (SG) less than the liquid that holds the float.
(SG float < SG liquid)
When the liquid level rises the float will rise up due to its buoyancy. The float's upward movement will actuate the switch and close the circuit.

Different float materials can be used to ensure the float's SG level is less than the liquid. (Water's SG level is 1 while gasoline SG levels tend to be less than 1).

Because the float switches are activated by the magnetic field inside the float, make sure the liquid contains no iron traces or substances that can induce magnetic interference.

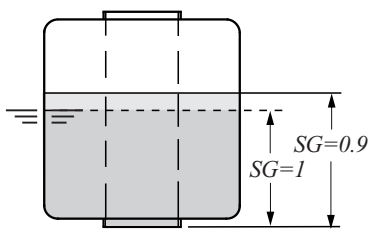

S3

(Fig. 3)

■ WORKING PRINCIPLE

Fig. 1 illustrates the pivot activation (FCH Type reed switch). When float's magnet is moved close to the switch's stationary stem, the float magnet pushes the stem's switch circuit together and closes the electrical circuit. When the float magnet is moved away from the stem, the switch circuit separates and the circuit is opened.

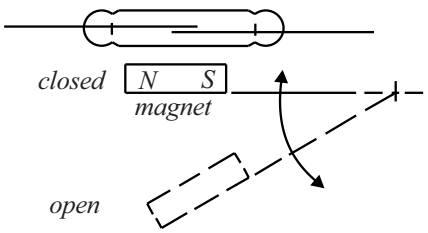

(Fig. 1)

Fig. 2 illustrates perpendicular activation (FC V TYPE float reed switches). When the liquid level rises and pushes the float up, the float's ring magnet (sealed in the float) moves close to the switch's stationary stem.

The magnet pushes the circuit together and when it makes contact, it closes the electrical circuit. When the float magnet moves away from the switch, the circuit contact is released and the switch is opened.

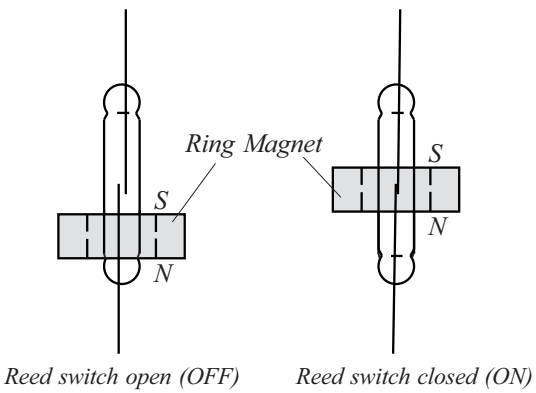

(Fig. 2)

CHEMICAL RESISTANCE

● Excellent ○ Good △ Fair × Corroded

Chemical	Concentration %	Temp °C	Temp °F	Plastic PVC	Plastic PP	Plastic PVDF	Plastic PTFE	Rubber NBR	Stainless 304	Stainless 316
Ammonia Water NH_4OH	10	40	104	●	●	●	●	○		
	10	80	176		○	●	●			
Aque Regia $3HCl+HNO_3$	10	40	104	△	△	●	●			
	10	80	176			●	●			
Benzene C_6H_6	Pure	40	104	×	△	○	●			
		80	176			△	●			
Bleaching Liquor $Ca(ClO)_2$	5	40	104	●		●	●			
	5	80	176			●	●			
	20	40	104	●		●	●			
	20	80	176			●	●			
Boric Acid H_3BO_3	Satu	40	104	●	●	●	●	●		
		80	176		●	●	●	○		
Brine		40	104	●	●	●	●	●		
		80	176		●	●	●			
Butadiene $CH_2=CH=CH=CH_2$	Gas	40	104	●		●	●			
		80	176			●	●			
Butane $CH_3(CH_2)_2CH_3$	Gas	40	104	●	●	●	●			
		80	176		●	●	●			
Nitric Acid HNO_3	10	40	104	●	●	●	●	●	●	●
	10	80	176	×	○	●	●		●	
	30	40	104	●	●	●	●		●	●
	30	80	176	×	○	●	●		●	●
	50	40	104	○	○	●	●		●	●
	50	80	176	×	×	○	●			
	70	40	104	○	×	●	●		○	●
	70	80	176	×		○	●			
	98	40	104			○	○			
	98	80	176				△			
Oxalic Acid HOOCCOOH	20	40	104	●	●	●	●	●		△
	20	80	176		●	●	●			
	50	40	104	●	●	●	●			△
	50	80	176		●	●	●			
Phosphoric Acid H_3PO_4	10	40	104	●	●	●	●	●	●	●
	10	80	176		○	●	●	△	●	●
	50	40	104	●	●	●	●	●	●	●
	50	80	176		△	●	●	×	●	●
	80	40	104	●	●	●	●	○	●	●
	80	80	176		△	●	●		●	●
Sodium Hydroxide NaOH	15	40	104	●	●	●	●	●	●	●
	15	80	176		○	△	●	△	×	×
	30	40	104	●	●	●	●	●	●	●
	30	80	176		○	△	●	●	×	×
	50	40	104	●	●	○	●	●	●	●
	50	80	176		○	×	●	●	×	×
	70	40	104	○	○	○	●			
	70	80	176		○	×	●			

Chemical	Concentration %	Temp °C	Temp °F	Plastic PVC	Plastic PP	Plastic PVDF	Plastic PTFE	Rubber NBR	Stainless 304	Stainless 316
Sodium Hypochlorite NaClO	3	40	104	●	○	●	●		△	○
	3	80	176							
	5	40	104	●	○	●	●		△	○
	5	80	176							
	7	40	104	●	△	○	●		×	×
	7	80	176							
	10	40	104	●	△	●	●		×	×
	10	80	176							
	13	40	104	●	△	●	●		×	×
	13	80	176							
Sulfuric Acid H_2SO_4	10	40	104	●	●	●	●	●	●	●
	10	80	176		●	●	●	○	○	○
	30	40	104	●	●	●	●	●	×	×
	30	80	176		●	●	●	○	×	×
	50	40	104	●	●	●	●	○	×	×
	50	80	176		●	●	●	△	×	×
	60	40	104	●	●	●	●	●	×	×
	60	80	176		○	●	●	○	×	×
	70	40	104	●	●	●	●	○	×	×
	70	80	176		○	●	●	△	×	×
	80	40	104	●	●	●	●	●	×	×
	80	80	176		○	●	●	△		
	90	40	104	○	●	●	●	△	×	×
	90	80	176		○	●	●	△		
	98	40	104	△		●	○		○	○
	98	80	176			△	○			
Toluene $C_6H_5CH_3$		40	104		△	△	●			
		80	176				○			
Chlorine Gas Cl_2	Wet	40	104	○		●	●			
	Wet	80	176			△	●			
	Dry	40	104	●		●	●			
	Dry	80	176			●	●			
Chromic Acid H_2CrO_4	10	40	104	●		●	●			
	10	80	176			●	●			
	20	40	104	△		●	●			
	20	80	176			●	●			
	40	40	104	△		●	●			
	40	80	176			●	●			
	50	40	104	×		●	●			
	50	80	176			△	●			
Hydrochloric Acid HCl	15	40	104	●	●	●	●	○		
	15	80	176		●	●	●			
	25	40	104	●	●	●	●	×		
	25	80	176		●	●	●			
	35	40	104	●	●	●	●	×		
	35	80	176		○	●	●			
	38	40	104	●	●	●	●	×		
	38	80	176		○	●	○			

● Excellent ○ Good △ Fair × Corroded

Chemical	Concentration %	Temp °C	Temp °F	Plastic PVC	Plastic PP	Plastic PVDF	Plastic PTFE	Rubber NBR	Stainless 304	Stainless 316
Citric Acid	10	40	104	●	●	●	●	●	●	●
$C_6H_8O_7$	10	80	176		○	●	●	●		
Gasoline	10	40	104	●		●	●			
	10	80	176			●	●			
Diesel Fuels		40	104			●	●		●	●
		80	176			●	●		●	●
Ethyl Alchol	Pure	40	104	●	●	●	●	●	○	○
C_2H_5OH		80	176		○	●	●	○		
Formic Acid	90	40	104	○	○	●	●			
HCOOH		80	176			●	●			
Hydrofluric Acid	Dilute	40	104	●	○	●	●			
	Dilute	80	176		○	●	●			
HF	30	40	104	○	○	●	●			
	30	80	176	×	○	●	●			
	40	40	104	△	○	●	●			
	40	80	176		○	●	●			
	50	40	104	△	○	●	●			
	50	80	176		○	●	●			
Hydrogen peroxide	5	40	104	●	●	●	●		○	●
	5	80	176		○	●	●			
H_2O_2	20	40	104	●	●	●	●			
	20	80	176		○	●	●			
	30	40	104	○	○	●	●			
	30	80	176		△	●	●			
	50	40	104	△	×	●	●			
	50	80	176			●	●			
	90	40	104			●	●			
	90	80	176			●	●			
Isopropyl Alcohol	Pure	40	104	●	●	●	●	○		
$(CH_3)CHOH$		80	176			●	●			
Kerosene		40	104	●	○	●	●			
		80	176			●	●			
Methyl Alcohol		40	104	○	●	●	●	△		
CH_3OH		80	176		○	●	●			
Methyl Ethyl Ketone		40	104		△		●			
$CH_3COC_2H_5$		80	176				●			
Potassium Chromate		40	104	●	●	●	●	●		
K_2CrO_4		80	176		○	●	●	○		

REED SWITCH PROTECTION

■ INDUCTIVE LOADS

When using reed switches for inductive loads such as motors, relay coil, solenoids, etc., the contact points will sometimes be subjected to high voltages. Such high induced voltages may damage the reed switch or significantly reduce its life.

Therefore, circuit protectors such as: RC snubbers, varistors or clamping diodes are recommended. (see Fig. 4a, Fig. 4b, Fig. 4c)

$$C=\frac{I^2}{10}\ (uF)$$

$$R=\frac{E}{10I(1+\frac{E}{50})}$$

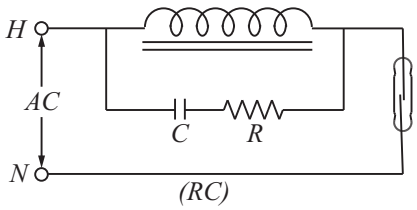

(RC)

Fig. 4 (a)

■ Do not directly connect the solenoid valve,motor or magnetic switch.

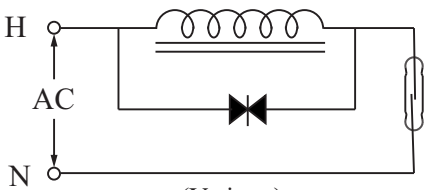

(Varistor)

Fig. 4 (b)

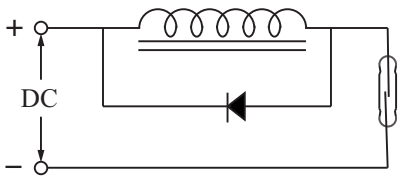

(Diode)

Fig. 4 (c)

■ CAPACITIVE LOADS

When using reed switches for capacitive loads such as capacitors, incandescent lamps or long cables, the contact points will be subjected to electrical surges.Therefore, protective circuits such as: surge suppressors or current limiting resistors are recommended. (Fig. 5a, Fig. 5b)

Therefore, circuit protectors such as: RC snubbers, varistors or clamping diodes are recommended (Fig. 5a, Fig. 5b)

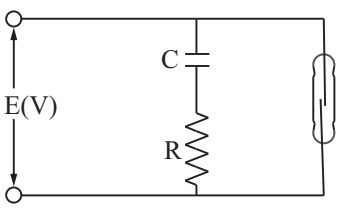

Fig. 5 (a)

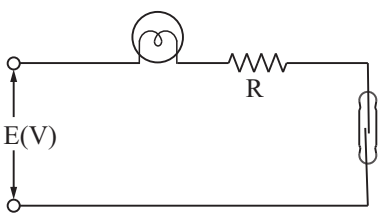

Fig. 5 (b)

FLOAT SPECIFICATIONS

MODEL	TYPE	ϕA xBxϕC	S.G.	Max. Pressure (kg/cm^2)	Weight (g)	Material/Color	Max. Temp. (°C)
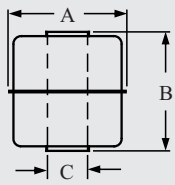	S1	28x28x9.5	E>0.7	10	8	SUS 316 / 316L	200
	S3	45x55x15	E>0.65	12	37.6	SUS 316	200
	S6	75x108x20	E>0.5	10	165	SUS 316	200
	S13	38x50x15	E>0.62	12	22.9	SUS 316L	200
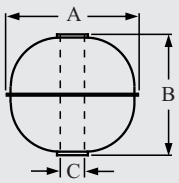	S2	41x38x11	E>0.7	35	19.5	SUS 316	200
	S4	52x52x15	E>0.55	30	33.4	SUS 316	200
	S5	75x73x20	E>0.70	30	102.4	SUS 316	200
	S7	30x28x9.5	E>0.75	25	8	SUS 316 / 316L	200
	S8	100x100x20	E>0.5	15	249.7	SUS 304	200
	S9	150x150x30	E>0.45	15	534	SUS 304	200
	S10	30x32x9.5	E>0.75	50	8.6	SUS 316	200
	S11	28x32x9.5	E>0.82	30	8.1	SUS 316	200
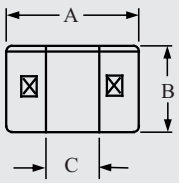 (Hollow)	P1	25x15x10	E>0.65	4	3.5	PP / white black	80
	P2	25x25x10	E>0.7	4	5	PP / white black	80
	P3	48x45x18.5	E>0.6	5	35.5	PP / black	80
	P4	20x25x10	E>0.7	4	3.7	PP / black	80
	P5	20x20x8.1	E>0.75	4	4	PP / black	80
	P8	18.2x15.3x7.2	E>0.8	4	1.82	PP / black	80
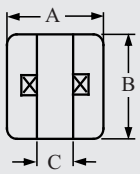 (Foam)	Q6	20x20x7.5	E>0.75	ATM	3.5	PP / white	80
	Q7	25x25x8.8	E>0.7	ATM	6.7	PP / white	80
	N1	25x15x10	E>0.5	ATM	2.7	NBR / black	100
	N2	18.5x26x10	E>0.7	ATM	3.3	NBR / black	100
	N4	17.5x25x10	E>0.65	ATM	2.5	NBR / black	100
	N5	30x45x12.8	E>0.5	ATM	11.5	NBR / black	100
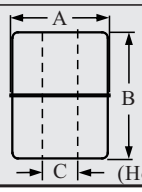 (Hollow)	F2	42x44x14	E>0.45	5	18.5	PP	80
	F3	45x45x20	E>0.65	5	35.7	PP	80
	F4	48x62x18	E>0.8	5	65.3	PVDF	120

STAINLESS STEEL SWITCHES

▶ FD MH50/ 56

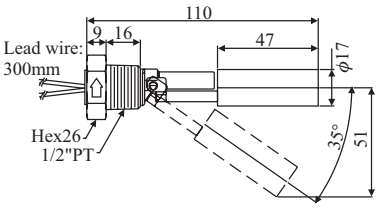

▶ FD MH50A /56A

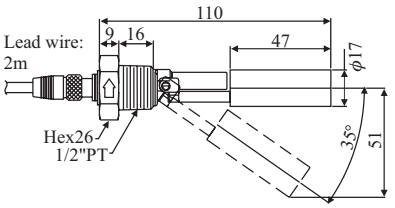

▶ FD MH50C /56C

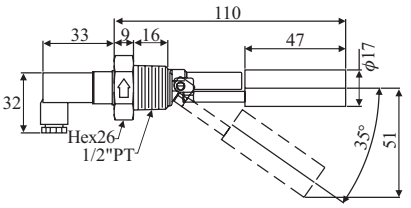

▶ FD MH60/ 66

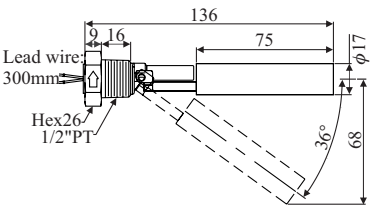

▶ FD MH60A/ 66A

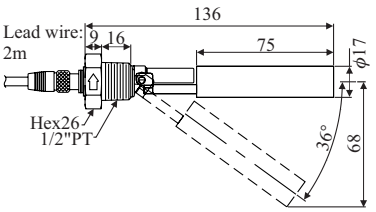

▶ FD MH60C/ 66C

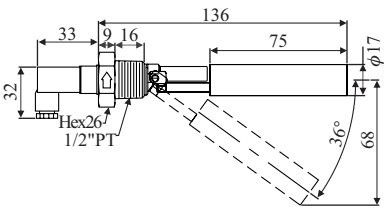

■ SPECIFICATIONS

Type	Material	Switching Capacity Max.	Switching Voltage Max.	Switching Current Max.	Carry Current Max.	Lead Wire	Max. Pressure	Operating Temp.	Suitable Sp. Gr.
FDMH50/56 **FDMH60/66**	SUS 304 SUS 316	50W/SPST	240Vac 200Vdc	0.5A	1A	XLPE or TEFLON	5 kg/cm^2	-20~120°C (Max.200°C)	FDMH5:0.92 FDMH6:0.75
FDMH50A/56A **FDMH60A/66A**	SUS 304 SUS 316	50W/SPST	240Vac 200Vdc	0.5A	1A	PVC or PUR	5 kg/cm^2	80°C	FDMH5:0.92 FDMH6:0.75
FDMH50C/56C **FDMH60C/66C**	SUS 304 SUS 316	50W/SPST	240Vac 200Vdc	0.5A	1A	NA	5 kg/cm^2	-20~120°C	FDMH5:0.92 FDMH6:0.75

MODEL / NUMBER ORDER CODE COMPARISON TABLE

Model Number	Order Code
FDMH50	FDM10000-05MA
FDMH56	FDM10000-05MB
FDMH60	FDM10000-06MA
FDMH66	FDM10000-06MB
FDMH50A	FDM10000-05MAA
FDMH56A	FDM10000-05MBA
FDMH60A	FDM10000-06MAA
FDMH66A	FDM10000-06MBA
FDMH50C	FDM10000-06MAB
FDMH56C	FDM10000-05MBB

ORDER INFORMATION (STAINLESS STEEL SWITCHES)

⑦⑧ ⑨⑩⑪⑫⑬⑭⑮⑯⑰⑱⑲⑳㉑㉒㉓

FDM 1 0 0 □□-□□□□□□□□□□□□□□□

⑦⑧ Certification

00：None

⑨⑩ Type

05：ϕ17x47L (SG: 0.92)

06：ϕ17x75L (SG: 0.75)

⑪⑫ Material

MA：SUS 304

MB：SUS 316

⑬ Wiring

A: M12

B: DIN

C: Cable wire type 1

⑭⑮⑯⑰ Connection

A503：1/2"PF

A501：1/2"PT

A507：1/2"NPT

A505：1/2"BSP

⑱⑲⑳ Material of Lead wire

000: None

210：Teflon(200°C AWG24)

220：PUR(For M12)

250：Silicon(150°C AWG24 Cable)

291：XLPE(125°C AWG22)

㉑㉒㉓ Lead wire Length

001：100mm	008：800mm
002：200mm	009：900mm
003：300mm	010：1000mm
004：400mm	020：2000mm
005：500mm	100：10m
006：600mm	000：None
007：700mm	

※Connector M12 whose standard wire length is 2m ,5m,10m,15m

MARINE LEVEL SWITCHES

▶ **FDMRN5A0B** ▶ **FDMRN5B0B** ▶ **FDMRN5COB** ▶ **FDMRN5D0B**

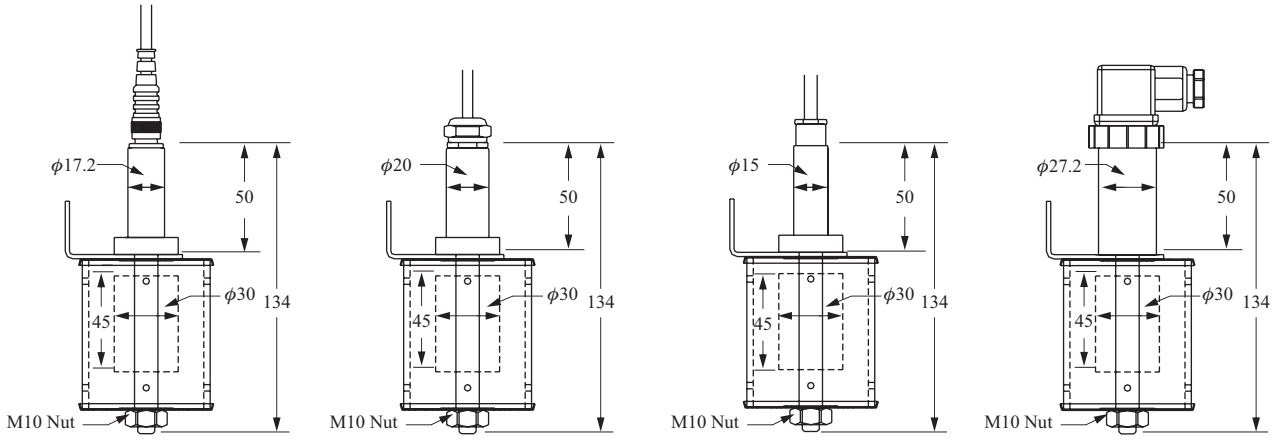

■ SPECIFICATIONS

Type	Material	Switching Capacity Max.	Switching Voltage Max.	Switching Current Max.	Carry Current Max.	Lead Wire	Max. Pressure	Operating Temp.	Suitable Sp. Gr.
FDMRN5A0B	SUS 304 (Float:NBR)	50W/SPST	240Vac 200Vdc	0.5A	1A	M12, 2 meter	ATM	Max. 80°C	0.5
FDMRN5B0B	SUS 304 (Float:NBR)	50W/SPST	240Vac 200Vdc	0.5A	1A	PVC,22 AWG	ATM	Max. 80°C	0.5
FDMRN5C0B	SUS 304 (Float:NBR)	50W/SPST	240Vac 200Vdc	0.5A	1A	Silicon	ATM	Max. 100°C	0.5
FDMRN5D0B	SUS 304 (Float:NBR)	50W/SPST	240Vac 200Vdc	0.5A	1A	DIN 43650	ATM	Max. 80°C	0.5

MARINE LEVEL SWITCHES

▶ **FDMRN8A0B** ▶ **FDMRN8B0B** ▶ **FDMRN8C0B** ▶ **FDMRN8D0B**

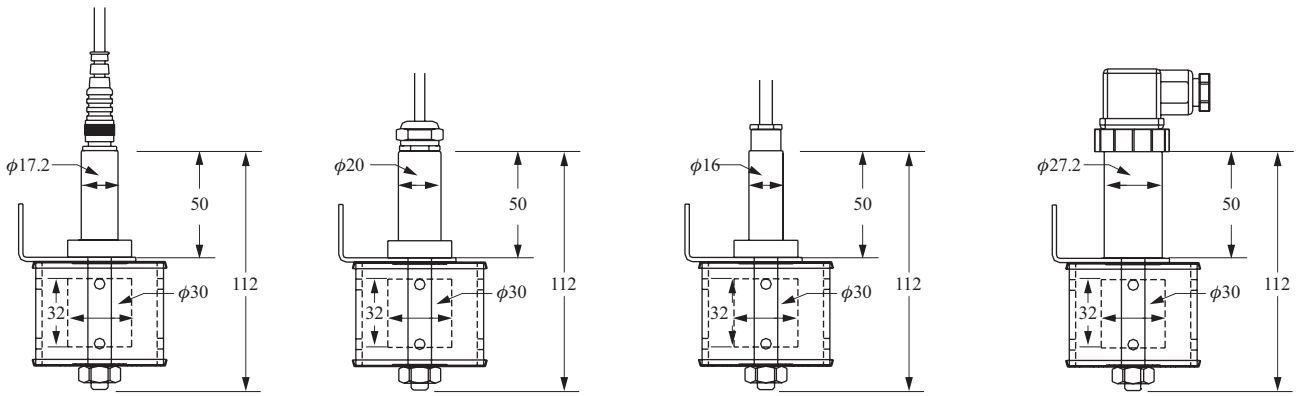

■ SPECIFICATIONS

Type	Material	Switching Capacity Max.	Switching Voltage Max.	Switching Current Max.	Carry Current Max.	Lead Wire	Max. Pressure	Operating Temp.	Suitable Sp. Gr.
FDMRN8A0B	SUS 304 (Float:NBR)	50W/SPST	240Vac 200Vdc	0.5A	1A	M12, 2 meter	ATM	Max. 80ºC	0.7
FDMRN8B0B	SUS 304 (Float:NBR)	50W/SPST	240Vac 200Vdc	0.5A	1A	PVC,22 AWG	ATM	Max. 80ºC	0.7
FDMRN8C0B	SUS 304 (Float:NBR)	50W/SPST	240Vac 200Vdc	0.5A	1A	Silicon	ATM	Max. 100ºC	0.7
FDMRN8D0B	SUS 304 (Float:NBR)	50W/SPST	240Vac 200Vdc	0.5A	1A	DIN 43650	ATM	Max. 80ºC	0.7

■ FDB-0450 PARTS OF SLOSH SHIELD

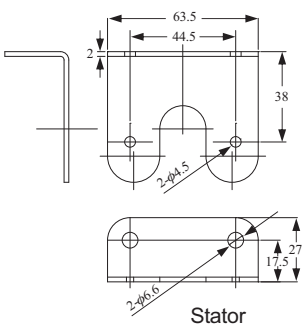

Stator

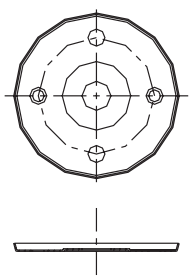

Acrylic for case Upper/Lower

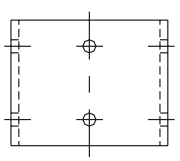

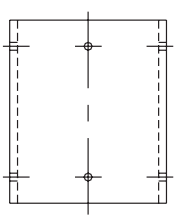

Acrylic cover

HOW TO ORDER MARINE LEVEL SWITCHES

▶ **FDMRN5A** ▶ **FDMRN5B** ▶ **FDMRN5C** ▶ **FDMRN5D** ▶ **FDMRN8C**

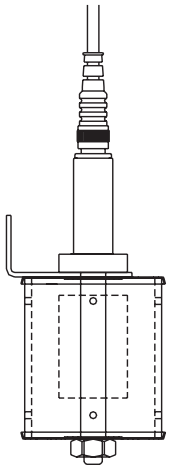

A TYPE

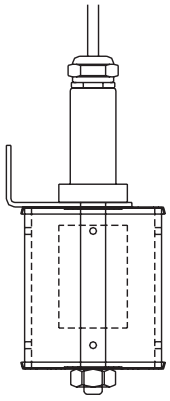

B TYPE

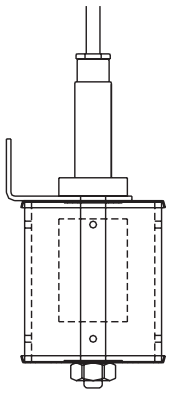

C TYPE

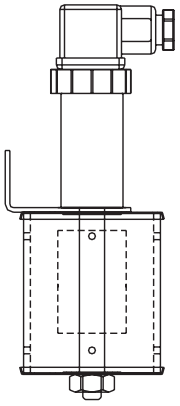

D TYPE

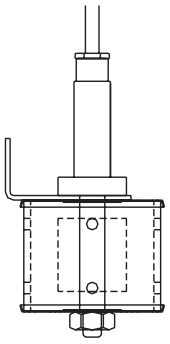

C TYPE

MODEL / NUMBER ORDER CODE COMPARISON TABLE

Model Number	Order Code
FDMRN5A0B	FDM20000-N5MAAB
FDMRN5B0B	FDM20000-N5MACB
FDMRN5C0B	FDM20000-N5MADB
FDMRN5D0B	FDM20000-N5MABB
FDMRN8A0B	FDM20000-N8MAAB220
FDMRN8B0B	FDM20000-N8MACB233
FDMRN8C0B	FDM20000-N8MADB250
FDMRN8D0B	FDM20000-N8MABB

ORDER INFORMATION (MARINE LEVEL SWITCHES)

⑦ ⑧ ⑨ ⑩ ⑪ ⑫ ⑬ ⑭ ⑮ ⑯ ⑰ ⑱ ⑲ ⑳

FDM 2 0 0 □□-□□□□□□□□□□□□

⑦⑧ Certification

00：None

⑨⑩ The material of the float

N5：ϕ30x45L (NBR)

N8：ϕ30x32L (NBR)

⑪⑫ The material of the probe

MA：SUS 304

MC：SUS 316L

⑬ Wiring

A：M12

B：DIN

C：Cable wire type 1 (B type)

D：Cable wire type 2 (C Type)

⑭ Contact type

A: NO

B: NC

⑮⑯⑰ Material of Lead wire

000：None

220：PUR (for M12)

231：PVC (80°C AWG22 Cable)

250：Silicon (150°C AWG24 Cable)

⑱⑲⑳ Lead wire Length

001：100mm	008：800mm
002：200mm	009：900mm
003：300mm	010：1000mm
004：400mm	020：2000mm
005：500mm	100：10m
006：600mm	000：None
007：700mm	

STAINLESS STEEL MODELS

▶ FD 30□1/ FD 35□1

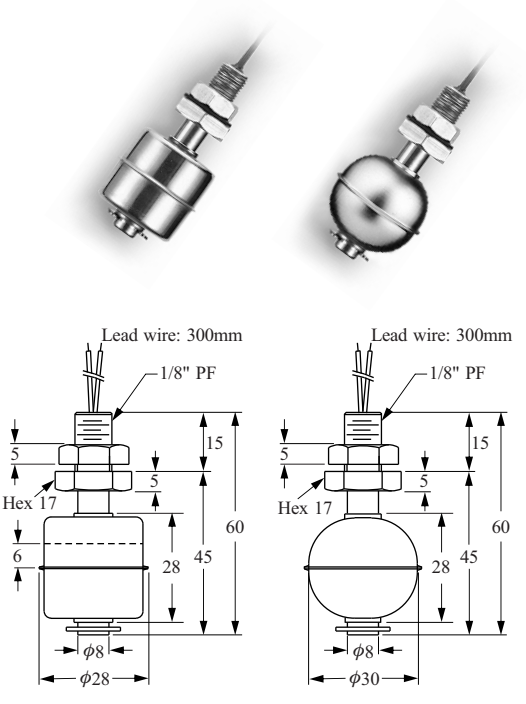

Washer: NBR
Drill hole ϕ10mm

▶ FD 40□1

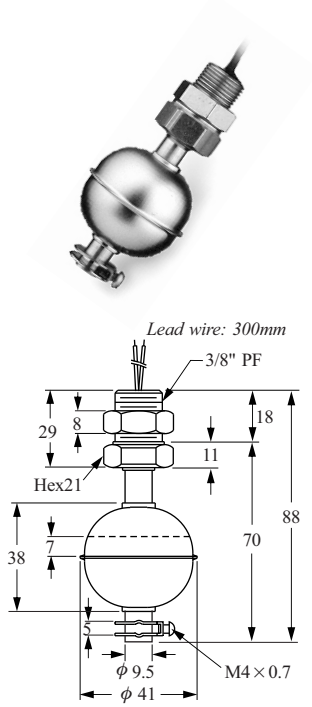

Washer: NBR
Drill hole ϕ17mm

▶ FD 45□1

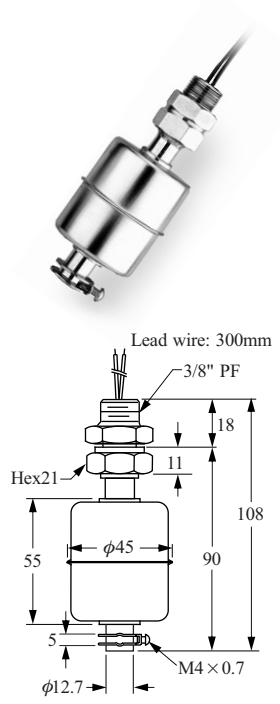

Washer: NBR
Drill hole ϕ17mm

▶ FD 30□2

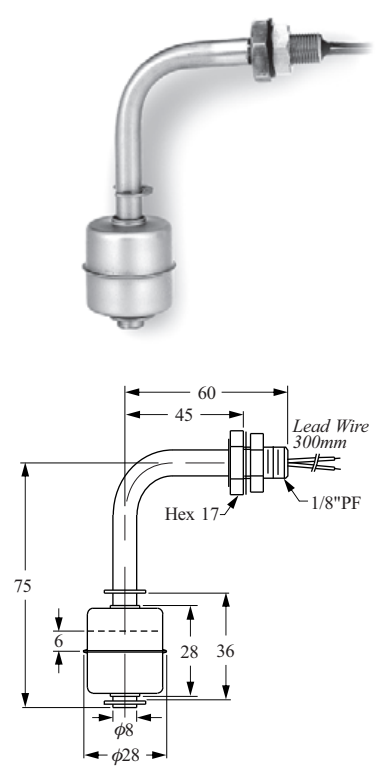

Washer: NBR
Drill hole ϕ10mm

▶ FD 40□2

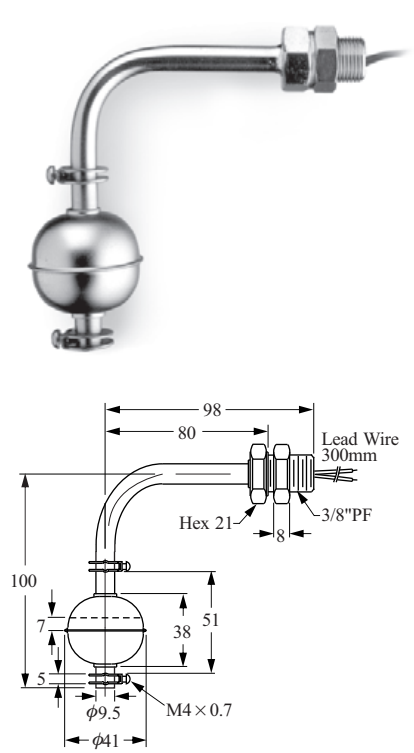

Washer: NBR
Drill hole ϕ17mm

▶ FD 45□2

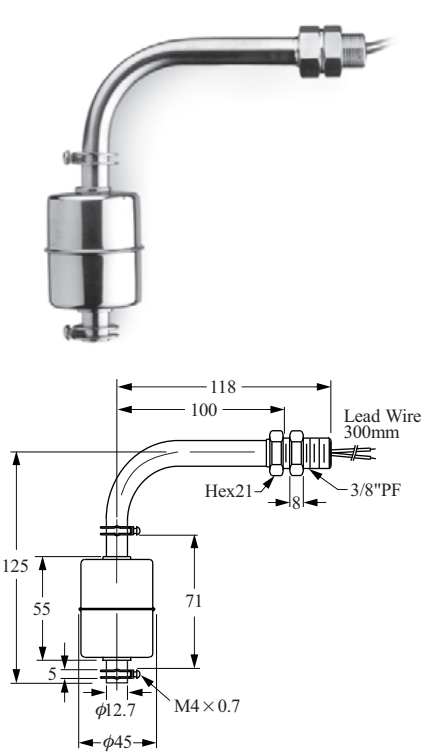

Washer: NBR
Drill hole ϕ17mm

METAL TYPES

▶ FD 50□1

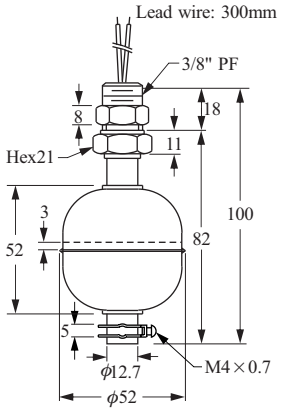

Washer: NBR
Drill hole ϕ17mm

▶ FD 50□2

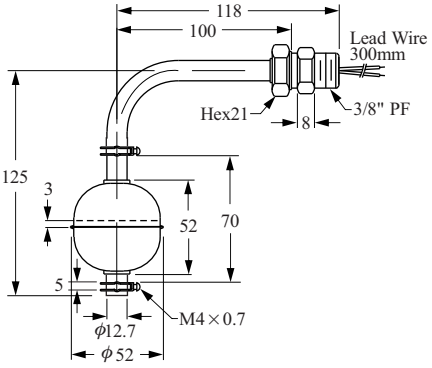

Washer: NBR
Drill hole ϕ17mm

▶ FD 75□1

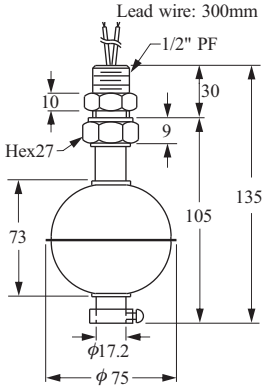

Washer: NBR
Drill hole ϕ21mm

■ SPECIFICATIONS

Type / Description	FD30□1D FD30□2D	FD40□1D FD40□2D	FD45□1D FD45□2D	FD50□1D FD50□2D	FD75□1D	FD10□1D
Material	Stainless Steel SUS304, 316					
Switching Capacity Max.	50W SPST	50W SPST	50W SPST	50W SPST	50W SPST	
Switching Voltage Max.	240Vac/200Vdc				220Vac	
Switching Current Max. (A)	0.5A	0.5A	0.5A	0.5A	1A	
Carry Current Max. (A)	1A	1A	1A	1A	2A	
Lead Wire	XLPE (UL3266, AWG22)					
Reversible Switch Action	YES / below 80°C, NO / UP 80°C				NO	NO
Max. Pressure (Kg/cm^2)	10	30	12	30	30	10
Operating Temperature	-20~120°C (OPTION 200°C)					
Suitable Specific Gravity	0.7	0.7	0.65	0.55	0.65	0.5

MODEL / NUMBER ORDER CODE COMPARISON TABLE

Model Number	Order Code
FD30□1D	FDM30000-30□□VD
FD30□2D	FDM30000-30□□HD
FD40□1D	FDM30000-40□□VD
FD40□2D	FDM30000-40□□HD
FD45□1D	FDM30000-45□□VD
FD45□2D	FDM30000-45□□HD
FD50□1D	FDM30000-50□□VD
FD50□2D	FDM30000-50□□HD
FD75□1D	FDM30000-75□□VD
FD10□1D	FDM30000-10□□VD

ORDER INFORMATION (STAINLESS STEEL SWITCHES)

⑤⑥ ⑦⑧ ⑨⑩ ⑪⑫ ⑬ ⑭ ⑮ ⑯⑰⑱ ⑲⑳㉑

FDM 3 □□□□-□□□□□□□□□□□□□

⑤⑥ Model
00: Standard
02: Hi-temperature

⑦⑧ Certification
00: None

⑨⑩ Type
10: ϕ75x108 ,1/2"PF
30: ϕ28x28,1/8"PF
31: ϕ28x28,1/8"NPT
35: ϕ30x28,1/8"PF
36: ϕ30x28,1/8"NPT
40: ϕ41x38,3/8"PF
45: ϕ45x55,3/8"PF
50: ϕ52x52,3/8"PF
75: ϕ75x73,1/2"PF

⑪⑫ Probe material
MA: SUS 304
MB: SUS 316

⑬ Mounting
V: Top or Bottom Mounting
H: Side Mounting

⑭ Switching Capacity Max.
D: 50W 240VAC/200VDC SPST
F: 10W 125VAC SPST
K: 20W 150VAC/200VDC SPDT

⑮ Contact Mode
A: SPST, Normal Open
B: SPST, Normal Closed
C: SPDT
D: Normal Closed Reversible
E: Normal Open Reversible

⑯⑰⑱ Material of Lead wire
210: Teflon (200°C AWG24)
230: PVC (80°C AWG22)
231: PVC (80°C AWG22 Cable)
232: PVC (80°C AWG24 Cable)
250: Silicon (150°C AWG24 Cable)
291: XLPE (125°C AWG22)
300: XLPVC (105°C AWG24)

⑲⑳㉑ Lead wire Length
001: 100mm
002: 200mm
003: 300mm
004: 400mm
005: 500mm
006: 600mm
007: 700mm
008: 800mm
009: 900mm
010: 1000mm
020: 2000mm
100: 10m

PLASTIC OH MODELS

▶ FCH11QD

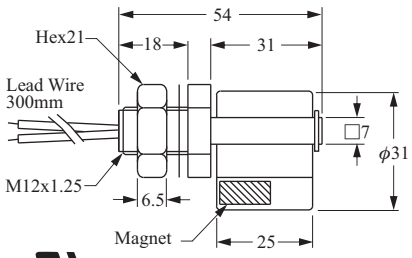

Washer: NBR

■ Installation / N.C./ N.O. Action Position

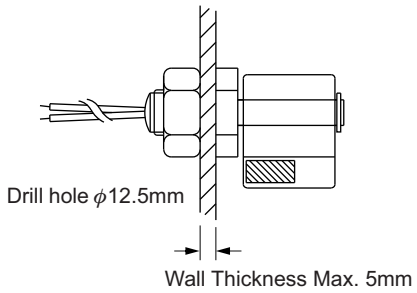

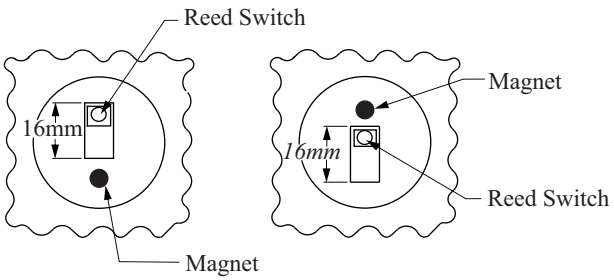

- All the products in this range come with UL E161587 approval.
- All the products in this range are designed to be side mounted.
- Water's specific gravity is used as the reference point for calculations.

■ SPECIFICATIONS

Description \ Type	FCH11QD	FCH21PD FCH31PD	FCH23FD FCH33FD	FCH25GD FCH35GD
Switching Capacity Max.	50W SPST			
Switching Voltage Max.	240VAC / 200Vdc			
Switching Current Max. (A)	0.5A			
Carry Current Max. (A)	1A			
Lead Wire	PVC AWG22	XLPE AWG22		
Max. Pressure (Kg/cm^2)	ATM	4 kg/cm^2	2 kg/cm^2	
Operating Temperature	-20~80°C		-20~120°C	
Material	PP		PVDF	Polysulfone
Suitable Specific Gravity	0.6	0.65	0.85	0.85
Weight	25 g	H21: 22 g H31: 21 g	25 g	25.4 g

PLASTIC OH MODELS

▶ FC H21PD / H31PD

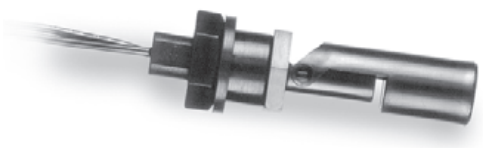

- FCH2 and FCH3 models are available in PP and PVDF.
- Special lead wire/cable are available on request.
- Different reed switches are available for selection.
- OEM designs are welcome.

■ Optional
FC H21PDO(Round)

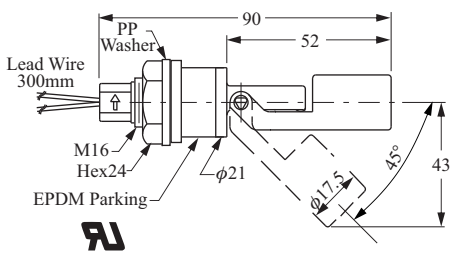

■ Standard
FC H21PDD (Hexagon)

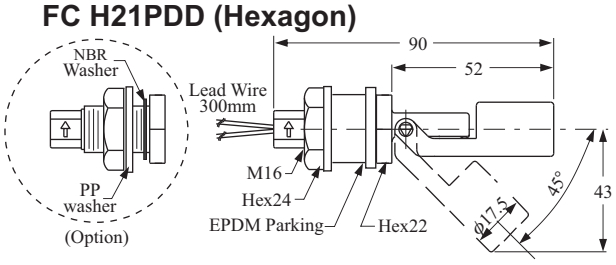

■ FC H31PD

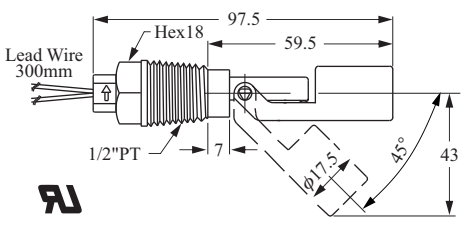

■ Installation / N.C. / N.O. Action Position

[External mounting]

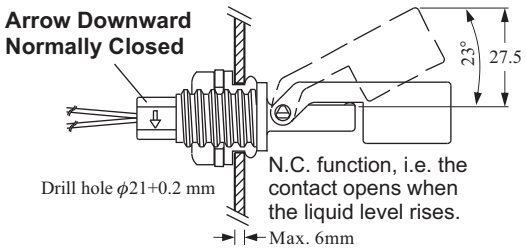

[Internal mounting]

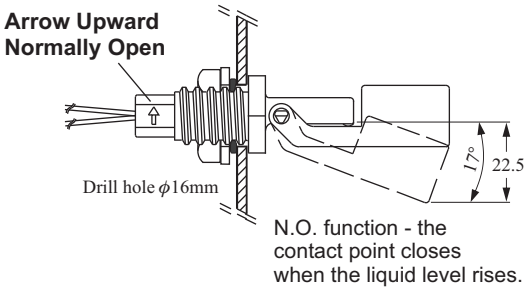

[External mounting]

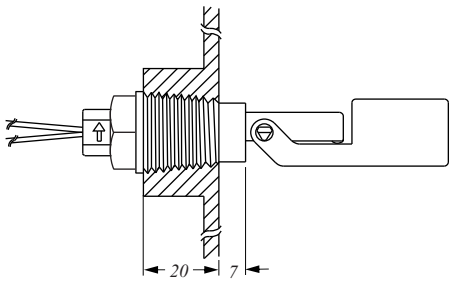

PLASTIC OH MODELS

▶ FC H41PD / H51PD

■ Installation / N.C. / N.O. Action Position

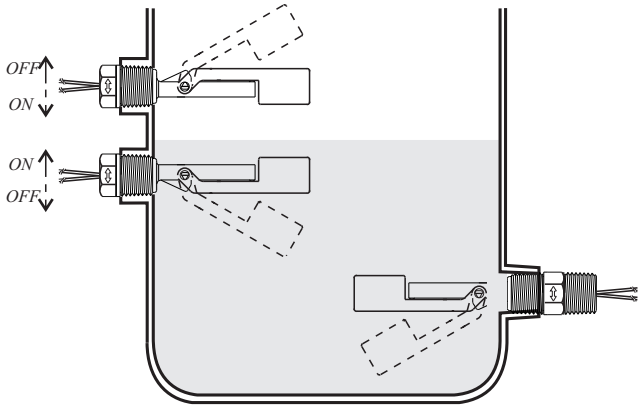

■ FC H41PD

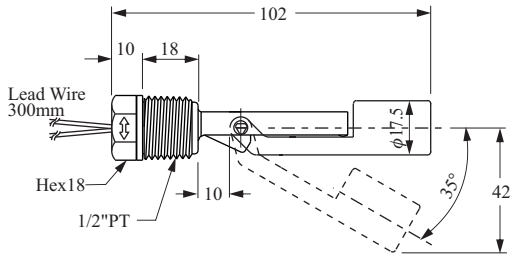

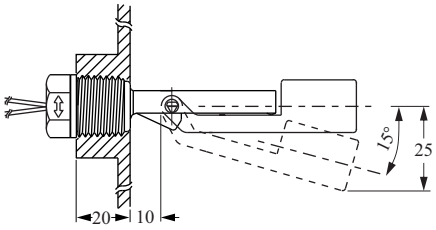

N.O. function, i.e. the contact closes when the liquid level rises.

■ FC H51PD

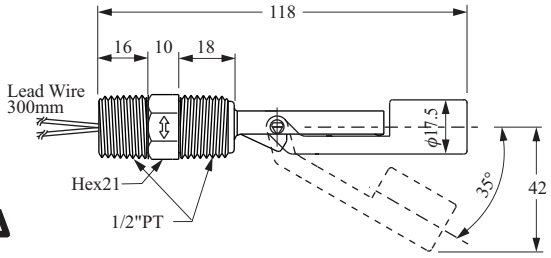

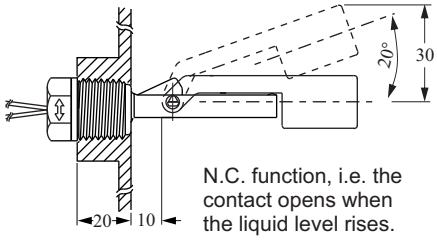

N.C. function, i.e. the contact opens when the liquid level rises.

■ FC H61PD

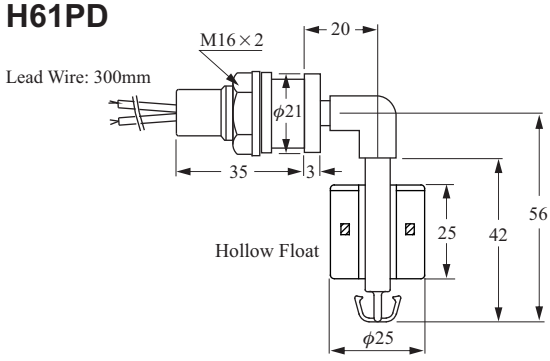

■ SPECIFICATIONS

Type	Material	Switching Capacity Max.	Switching Voltage Max.	Switching Current Max.	Carry Current Max.	Lead Wire	Max. Pressure	Operating Temp.	Suitable Sp. Gr.	Weight
FCH41PD	PP	50W/SPST	240Vac 200Vdc	0.5A	1A	XLPE	4 kg/cm^2	-20~80°C	0.55	20g
FCH51PD										25g
FCH61PD						PVC				31g

PLASTIC OV MODELS

▶ FC V11QF

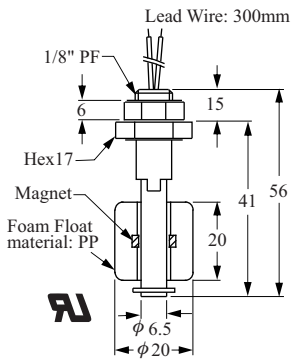

Washer: NBR
Drill hole ϕ10mm

▶ FC V21QD

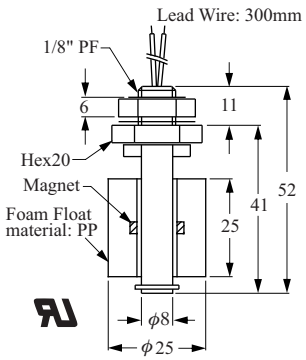

Washer: NBR
Drill hole ϕ10mm

▶ FC V31PD

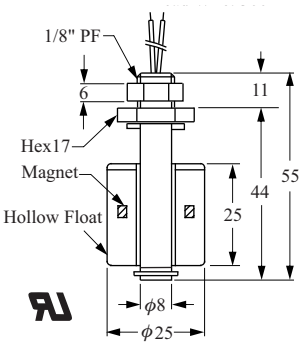

O-ring: VITON
Drill hole ϕ10mm

▶ FC V33FD, 35GD

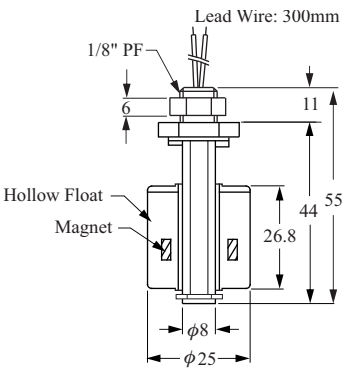

O-ring: VITON
Drill hole ϕ10mm

■ SPECIFICATIONS

Description / Type	FC V11QF	FC V21QD	FC V31PD	FC V33FD	FC V35GD
Switching Capacity Max.	10W SPST	50W SPST	50W SPST		
Switching Voltage Max.	125Vac	240Vac / 200Vdc	240Vac / 200Vdc		
Switching Current Max. (A)	0.5A		0.5A		
Carry Current Max. (A)	1A		1A		
Lead Wire	UL 1007 AWG22 PVC		UL 1007 AWG22 PVC	XLPE AWG22	
Reversible Switch Action	YES	NO	YES/ 80°C down		
Max. Pressure (Kg/cm^2)	ATM		4 kg/cm^2	2 kg/cm^2	
Operating Temperature	-20~80°C		-20~80°C	-20~120°C	
Material	PP		PP	PVDF	Polysulfone
Suitable Specific Gravity	0.75	0.7	0.7	0.85	0.85
Weight (g)	12 g	18 g	12.8 g	18 g	18 g

PLASTIC OV MODELS

▶ FC V41PD

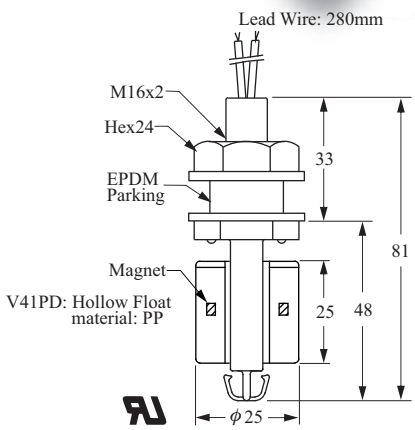

Washer: NBR
Drill hole ϕ16mm

▶ FC V61PF, V61NF

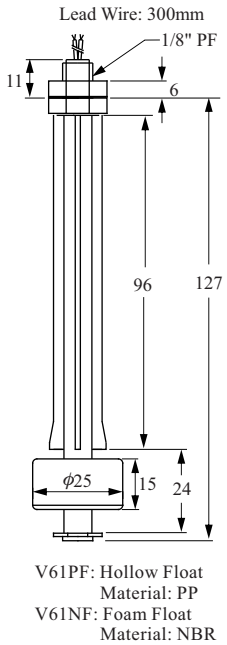

Washer: NBR
Drill hole ϕ10mm

▶ FC V81PD

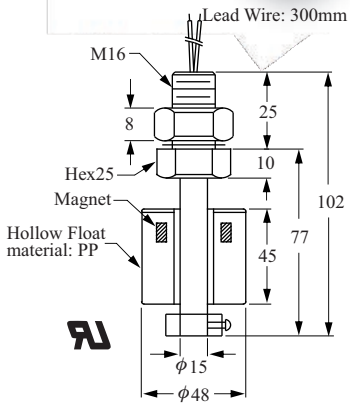

Washer: NBR
Drill hole ϕ16mm

▶ FC V41ND

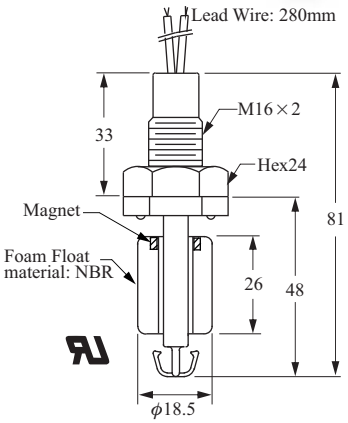

Washer: NBR
Drill hole ϕ16mm

▶ FC V51PD

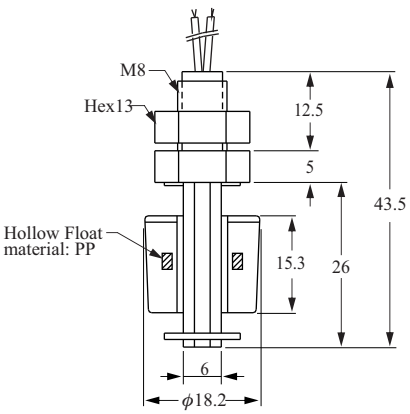

O-Ring: VITON
Drill hole ϕ8.5mm

PLASTIC OV MODELS

■ SPECIFICATIONS

Type / Description	FC V61PF FC V61NF	FC V41PD	FC V81PD	FC V41ND	FC V51PD
Switching Capacity Max.	10W SPST	50W SPST			
Switching Voltage Max.	125Vac (Break Down 250Vac)	240Vac / 200Vdc			
Switching Current Max. (A)	0.5A				
Carry Current Max. (A)	1A				
Lead Wire	UL 1007 AWG22 PVC				
Reversible Switch Action	NO	YES	NO	NO	NO
Max. Pressure (kg/cm^2)	V61P: 4kg/cm^2 V61N: ATM	4kg/cm^2	4 kg/cm^2	ATM	4 kg/cm^2
Operating Temperature	-20~80°C				80°C
Material	PP (except V61N, V41N: NBR float)				
Suitable Specific Gravity	0.65 0.5	0.55	0.6	0.7	0.8
Weight (g)	16 g	23 g	180 g	17 g	8.2 g

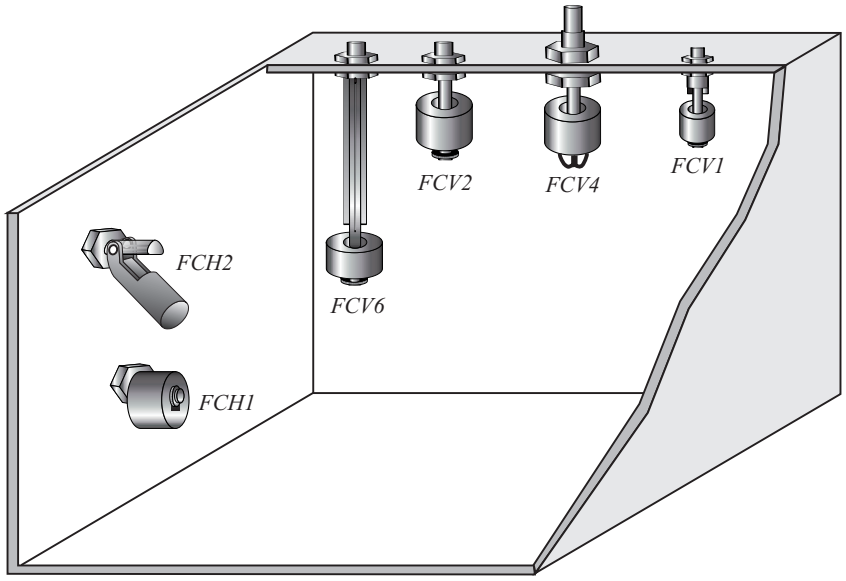

MODEL / NUMBER ORDER CODE COMPARISON TABLE

Model Number	Order Code
FCH11QD	FCM10000-H1181DD
FCH21PD	FCM10000-H2180D
FCH31PD	FCM10000-H3180DD
FCH23FD	FCM10000-H2240D
FCH33FD	FCM10000-H3240DD
FCH25GD	FCM10000-H2
FCH35GD	FCM10000-H3
FCH41PD	FCM10000-H4180DD
FCH51PD	FCM10000-H5180DD
FCH61PD	FCM10000-H6180D

FCV11QF	FCM10000-V1181F
FCV21QD	FCM10000-V2181D
FCV31PD	FCM10000-V3180D
FCV33FD	FCM10000-V3240D
FCV35GD	FCM10000-V3
FCV61PF	FCM10000-V6180F
FCV61NF	FCM10000-V6070F
FCV41PD	FCM10000-V4180D
FCV81PD	FCM10000-V8180D
FCV41ND	FCM10000-V4070D
FCV51PD	FCM10000-V5180D

ORDER INFORMATION (PLASTIC MODELS)

⑦ ⑧ ⑨ ⑩ ⑪ ⑫ ⑬ ⑭ ⑮ ⑯ ⑰ ⑱ ⑲ ⑳ ㉑

FCM 1 0 0 □□-□□□□□□□□□□□□□

⑦⑧ Certification

00: None

⑨ Mounting

V: Top or bottom mounting
H: Side mounting

⑩ Type

1: Type 1
2: Type 2
3: Type 3
4: Type 4
5: Type 5
6: Type 6
7: Type 7
8: Type 8

⑪⑫⑬ Material of Wetted parts

070: NBR(Float), PP(Floating pole)
180: PP(Hollow float), PP(Floating pole)
181: PP(Foam float), PP(Floating pole)
240: PVDF(Float), PVDF(Floating pole)

⑭ Switching Capacity Max.

D: 50W 240VAC/200VDC SPST
F: 10W 125VAC SPST
K: 20W 150VAC/200VDC SPDT

⑮ Contact Mode

A: SPST, Normal Open
B: SPST, Normal Closed
D: Normal Closed Reversible
E: Normal Open Reversible
C: SPDT
※Side mounted types(FCH2,3,4,5) are only available with D mode.
NO or NC depends on the installation direction.

⑯⑰⑱ Material of Lead wire

210: Teflon (200°C AWG24)
230: PVC (80°C AWG22)
231: PVC (80°C AWG22 Cable)
232: PVC (80°C AWG24)
233: PVC (80°C AWG24 Cable)
234: PVC(80°C AWG18)
250: Silicon(150°C AWG24 Cable)
290: XLPE (125°C AWG22)
300: XLPVC (105°C AWG24)

⑲⑳㉑ Lead wire Length

001: 100mm
002: 200mm
003: 300mm
004: 400mm
005: 500mm
006: 600mm
008: 800mm
009: 900mm
010: 1000mm
020: 2000mm

CUSTOMIZED PLASTIC MODELS

▶ FC PV1

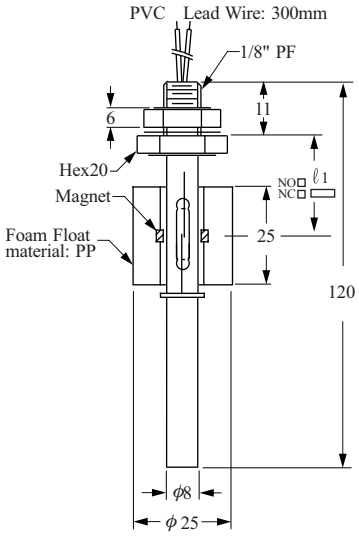

O-Ring: VITON

▶ FC PV2

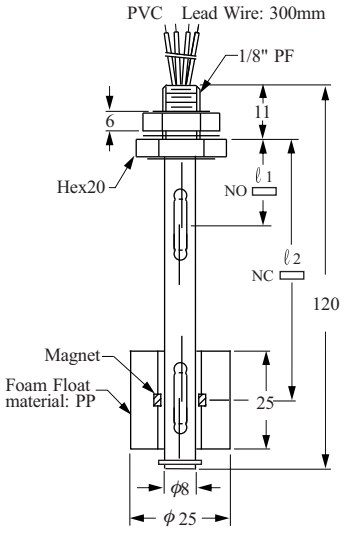

O-Ring: VITON

▶ FC PV3

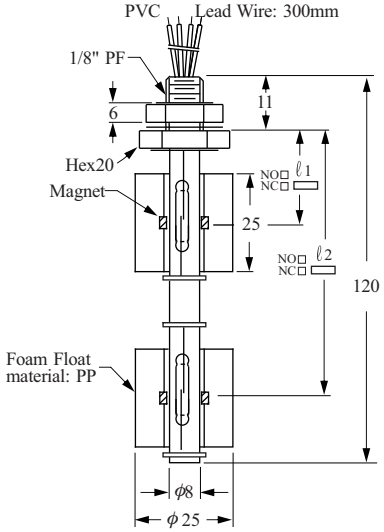

O-Ring: VITON

- NOTE: Float material's are optional.

The above items are custom-built when client demands are unique. The benefits are listed below:

- FCPV1 One float for one level activation.
  FCPV2 One float with 2 reed switches.
- Applicable for conditions where 1 float can actuate switches at high and low levels.
- FCPV3 Two floats actuate two independent reed switches: Each float unit's default setting can be either N.O. or N.C. as per cus

MODEL / NUMBER ORDER CODE COMPARISON TABLE

Model Number	Order Code
FCPV1	FCM20000-V118
FCPV2	FCM20000-V2
FCPV3	FCM20000-V318

ORDER INFORMATION (PLASTIC MODELS)

⑦ ⑧ ⑨ ⑩ ⑪ ⑫ ⑬ ⑭ ⑮ ⑯ ⑰ ⑱ ⑲ ⑳

FCM 2 0 0 □□-□□□□□□□□□□□□

⑦⑧ Certification

00: None

⑨⑩ Mounting

V1: Single float single switch
V2: Single float dual switch
V3: Dual float dual switch

⑪⑫ Probe material

07: NBR Float, PP(Floating pole)
18: PP Float
24: PVDF, PP(Floating pole)

⑬ Switching Capacity Max.

D: 50W 240VAC/200VDC SPST
F: 10W 125VAC SPST
K: 20W 150VAC/200VDC SPDT

⑭ Contact Mode

A: SPST, Normal Open
B: SPST, Normal Closed
C: SPDT
H: Double reed switch 1-NO ,1-NC

⑮⑯⑰ Material of Lead wire

000: None
230: PVC (80°C AWG22)
231: PVC (80°C AWG22 Cable)
232:PVC(80°C AWG24 Cable) When 2 floats
291: XLPE (125°C AWG22)

⑱⑲⑳ Lead wire Length

001: 100mm	006: 600mm
002: 200mm	008: 800mm
003: 300mm	009: 900mm
004: 400mm	010: 1000mm
005: 500mm	020: 2000mm

CUSTOMIZED PLASTIC MODELS

Items below are custom-built models for special applications or placement on existing facilities. Their unique characteristics are as follows:

- Any size measuring range, but ϕ8mm stem Max. 500mm.
- Customized mounting thread specifications are acceptable.
- Single or multiple contact points are workable.
- Switch activation N.O. or N.C. choices are available.

▶ FDSA□11

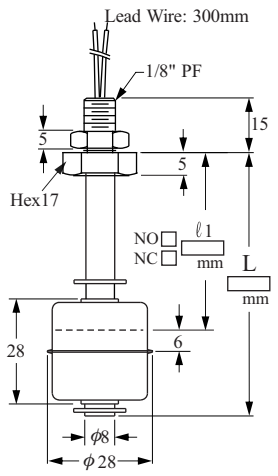

Washer: NBR

▶ FDSB□11

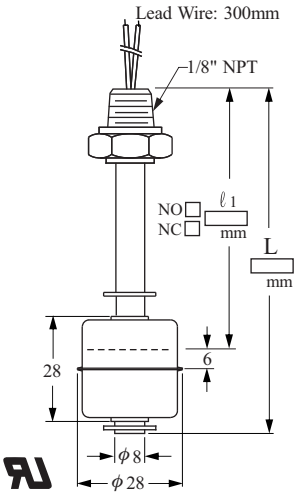

Washer: NBR

▶ FDSC□11

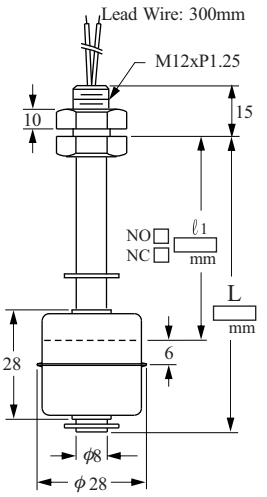

Washer: NBR

▶ FDSA□12

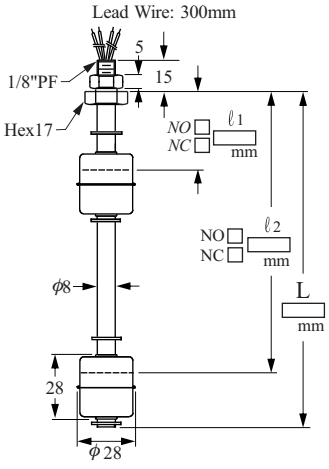

Washer: NBR

▶ FDSA□21

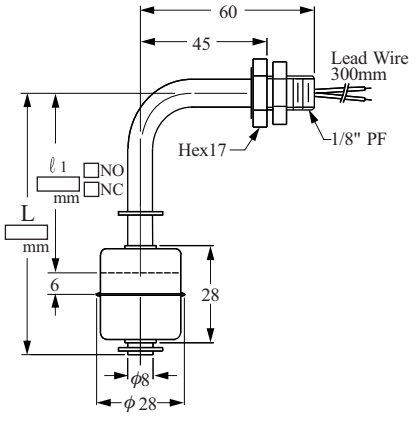

Washer: NBR

▶ FDSA□22

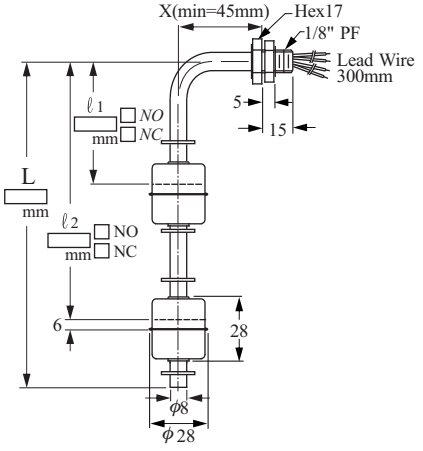

Washer: NBR

CUSTOMIZED STAINLESS STEEL MODELS

Items below are custom-built models for special application and location on existing equipment facilities. Their unique characteristics are as follows:

- Any size measurement range available.
- Customized mounting thread specification are acceptable.
- Single or multiple contact form (point) are workable.
- Switch activation N.O. or N.C. are available.

▶ FDSD□11

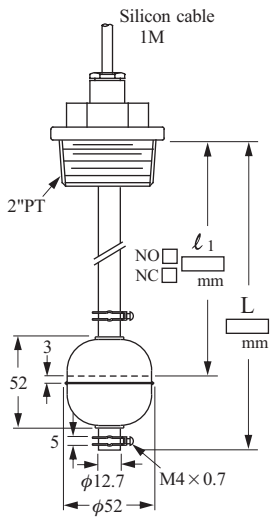

Washer: NBR

▶ FDSE□11

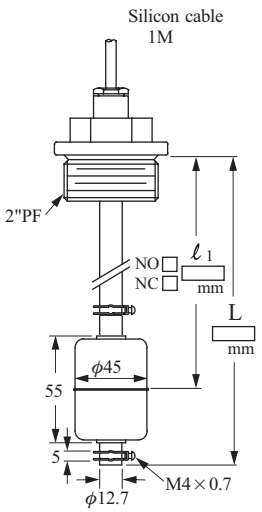

Washer: NBR

▶ FDSF□11

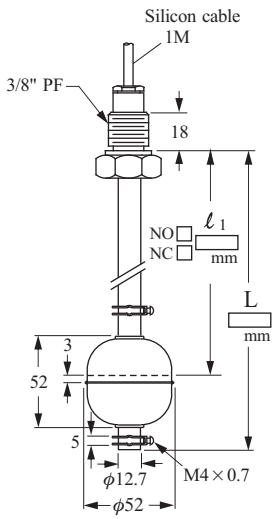

Washer: NBR

▶ FD4503D

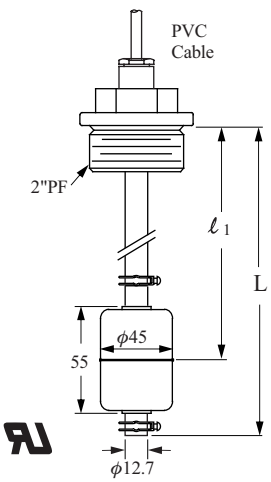

Washer: NBR

▶ FD5003G

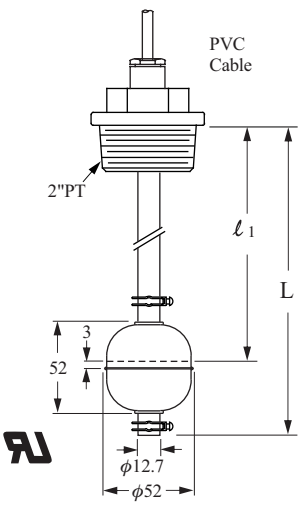

Washer: NBR

▶ FD7503G

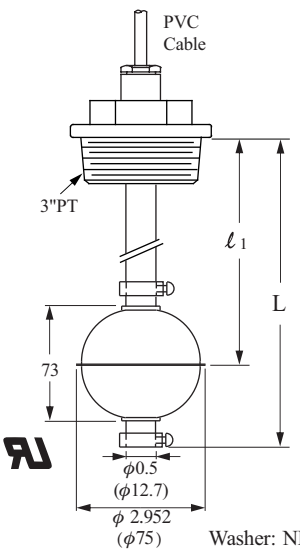

Washer: NBR

MODEL / NUMBER ORDER CODE COMPARISON TABLE

Model Number	Order Code
FDSA□11	FDM40000-SA
FDSB□11	FDM40000-SB
FDSC□11	FDM40000-SC
FDSA□12	FDM40000-SA
FDSA□21	FDM40000-SA
FDSA□22	FDM40000-SA
FDSD□11	FDM40000-SD
FDSE□11	FDM40000-SE
FDSF□11	FDM40000-SF

ORDER INFORMATION
(CUSTOMIZED STAINLESS STEEL MODELS)

⑨ ⑩ ⑪ ⑫ ⑬ ⑭ ⑮ ⑯ ⑰ ⑱ ⑲ ⑳ ㉑ ㉒

FDM 4 0 0 0 0 -□□□□□□□□□□□□□□

⑨ ⑩ Type

SA: Float ϕ 28x28, 1/8"PF
SB: Float ϕ 28x28, 1/8"NPT
SC: Float ϕ 28x28, M12
SD: Float ϕ 52x52, 2"PT
SE: Float ϕ 45x45, 2"PF
SF: Float ϕ 52x52, 3/8"PF
SG: Float ϕ 75x73, 3"PT

⑪ ⑫ Probe material

MA: SUS304
MB: SUS316

⑬ Mounting

V: Top or Bottom Mounting
H: Side Mount

⑭ Float Number

1: 1 float
2: 2 floats

⑮ Switching Capacity Max.

D: 50W 240VAC/200VDC SPST
K: 20W 150VAC/200VDC SPDT

⑯ Contact Mode

A: NO
B: NC
C: SPDT
H: 1 NO, 1NC

⑰ ⑱ ⑲ Material of Lead wire

210: Teflon (200°C AWG24)
250: Silicon(150°C AWG24 Cable)
291: XLPE (125°C AWG22)
230: PVC (80°C AWG22)
231: PVC(80°C AWG22 Cable)

⑳ ㉑ ㉒ Lead wire Length

001: 100mm
002: 200mm
003: 300mm
004: 400mm
005: 500mm
006: 600mm
008: 800mm
009: 900mm
010: 1000mm
020: 2000mm

TYPICAL WIRING DIAGRAMS

* AUTO SUPPLY CASE:
  SINGLE FLOAT DUAL SWITCHES

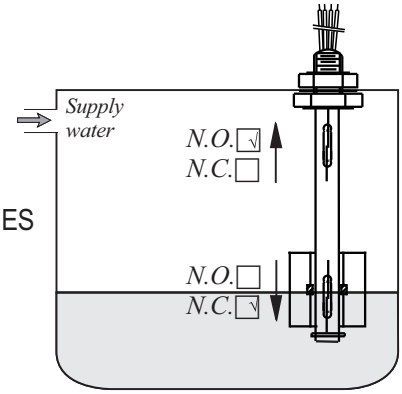

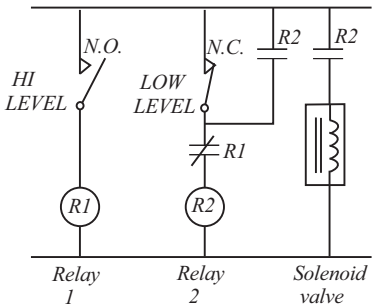

* AUTO DRAIN CASE:
  SINGLE FLOAT DUAL SWITCHES

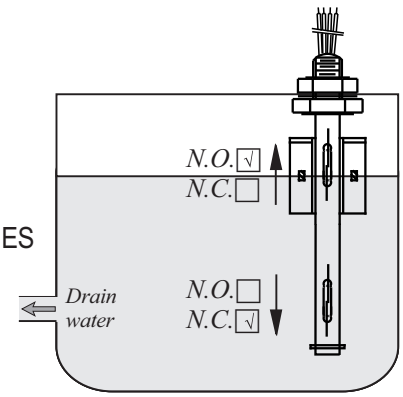

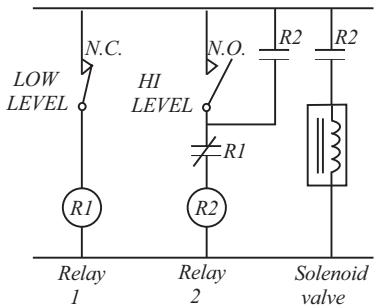

* AUTO SUPPLY CASE:
  DUAL FLOATS DUAL SWITCHES

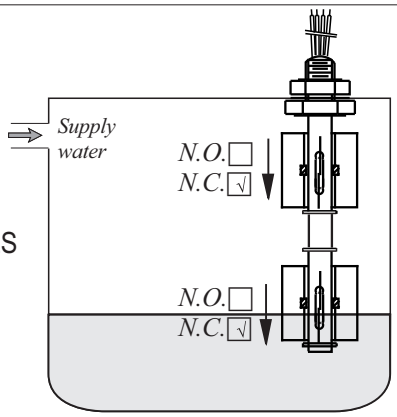

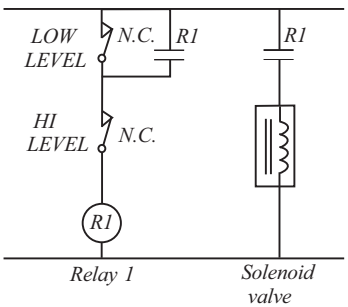

* AUTO DRAIN CASE:
  DUAL FLOATS DUAL SWITCHES

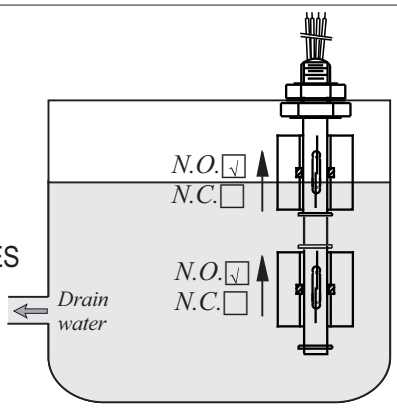

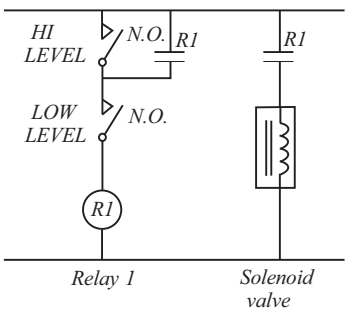

บริษัท ฟลูเทค จำกัด 845/3-4 หมู่ 3 ถ.เทพารักษ์ ต.เทพารักษ์ อ.เมือง จ.สมุทรปราการ 10270
FLU-TECH CO.,LTD 845/3-4 Thepharak RD., T.Thepharak, A.Muang, Samutprakarn 10270 THAILAND
Tel. 0 2384 6060, Fax 0 2384 5701, Email : pneumatic@flutech.co.th, www.flutech.co.th