DATA SHEET

Type 5420

bürkert
FLUID CONTROL SYSTEMS

4/2 way Solenoid Valve for pneumatics

- Compact design
- Push-over solenoid coil
- Exhaust air can be regulated
- Tube, threaded and sub-base connections
- Servo-diaphragm seat discs

Product variants described in the data sheet may differ from the product presentation and description.

Can be combined with

Type 1087
Timer

Type 2518
Cable Plug DIN EN 175301 - 803 - Form A

Type 2000
Pneumatically operated 2/2 way angle seat valve CLASSIC

Type 2511
Cable Plug Form A

Type 2513
Cable plug acc. to DIN EN 175301 - 803 Form A

Type description

The Type 5420 is a pilot-controlled 4-way seat valve with servo-diaphragms. A minimum differential pressure of 2.5 bar is needed for switch-over. The valve can be mounted on two channel manifolds with a common pressure supply.

บริษัท ฟลูเทค จำกัด
Flu-Tech co., ltd

บริษัท ฟลูเทค จำกัด
FLU - TECH CO., TD
845/3-4 หมู่ 3 ถ.เทพารักษ์ ต.เทพารักษ์ อ.เมือง จ.สมุทรปราการ 102070
845/3-4 Thepaharak RD., T. Thepharak, A. Muang, Samutprakan 10270 THAILAND
Tel. 0 2384 6060, Fax 0 2384 5701, Email : pneumatic@flutech.co.th, www.flutech.co.th

1. General technical data

Product properties	
Dimensions	Detailed information can be found in chapter "4. Dimensions" on page 5
Materials	
Body	Polyamide
Seal	NBR
Coil	Polyamide, Epoxy
Orifice	DN3
Electrical data	
Operating voltage	Standard version: 24 V DC 24/230 V/50…60 Hz ATEX version: 24/110/230 V UC
Power consumption	V DC version: 2 W V AC version: 11 VA (inrush), 6 VA (hold)
Voltage tolerance	+10 %
Performance data	
Air pressure quality	ISO 8573-1:2010, class 7.4.4
Flow rate (Q_{Nn}-value air)	200 l/min (Measured at +20 °C, 6 bar pressure at valve inlet and 1 bar pressure difference)
Duty cycle	100 % continuously rated
Response time	Opening: 30 ms (pressure rise 0…90 %) Closing: 20 ms (pressure drop 100…10 %)
Medium data	
Medium	Neutral medium, e.g. lubricated or unlubricated compressed air
Medium temperature	-10 °C…+60 °C
Medium pressure	2.5…10 bar (Overpressure to the atmospheric pressure)
Approvals and certificates	
Protection class	IP65 with cable plug
Type of protection (ATEX and IECEx)	
Coil with cable	EPS 18 ATEX 1232 X / IECEx EPS 18.0110X II 2G Ex mb IIC T5 Gb II 2D Ex mb IIIC T95 °C Db
Coil with junction box	EPS 18 ATEX 1232 X / IECEx EPS 18.0110X II 2G Ex eb mb IIC T5 Gb II 2D Ex mb tb IIIC T95 °C Db
Product connections	
Port connection	G ⅛, tube SL 6/4, sub-base
Cable plug Type 2518	Cable plug Type 2518 acc. to DIN EN 175301 – 803, Form A (previously DIN 43650, Form A) Detailed information can be found in chapter "Cable plug Type 2518, form A acc. to DIN EN 175301-803" on page 9
Environment and installation	
Installation	As required, preferably with actuator upright
Ambient temperature (max.)	55 °C

1.) To prevent freezing of the expanded compressed air, the pressure dew point must be at least 10 K lower than the temperature of the medium.

Orifice	Q_{Nn} value	Port connection		Coil power	Pressure range	Response times[1.)]		Weight
		1 and 3	2 and 4			Opening	Closing	
[mm]	[l/min]			[W]	[bar]	[ms]	[ms]	[kg]
3	200	G ⅛	G ⅛	3	2.5…10	30	20	ca. 0.4
3	200	SL 6/4	SL 6/4	3	2.5…10	30	20	ca. 0.4
3	200	sub-base[1.)]	G ⅛	3	2.5…10	30	20	ca. 0.4
3	200	sub-base[2.)]	SL 6/4	3	2.5…10	30	20	ca. 0.4

1.) For full opening a differential pressure of 2.5 bar is required.

2.) Sub-base for mounting on manifolds.

บริษัท ฟลูเทค จำกัด
FLU - TECH CO., TD
845/3-4 หมู่ 3 ถ.เทพารักษ์ ต.เทพารักษ์ อ.เมือง จ.สมุทรปราการ 102070
845/3-4 Thepaharak RD., T. Thepharak, A. Muang, Samutprakan 10270 THAILAND
Tel. 0 2384 6060, Fax 0 2384 5701, Email : pneumatic@flutech.co.th, www.flutech.co.th

2. Circuit functions

Circuit functions	Description
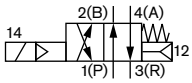	**Type: G, solenoid valve** 4/2 way Servo-controlled Normally open

บริษัท ฟลูเทค จำกัด
Flu-Tech co., ltd

3. Dimensions

3.1. Dimension for standard version

Note:

- Dimensions in mm
- Tube connection for semi-soft plastic tubes (outer-Ø 6 mm, inner-Ø 4 mm)
- For battery mounting, the union nuts on the Ports 1 and 3 are replaced by O-rings (10 × 2).

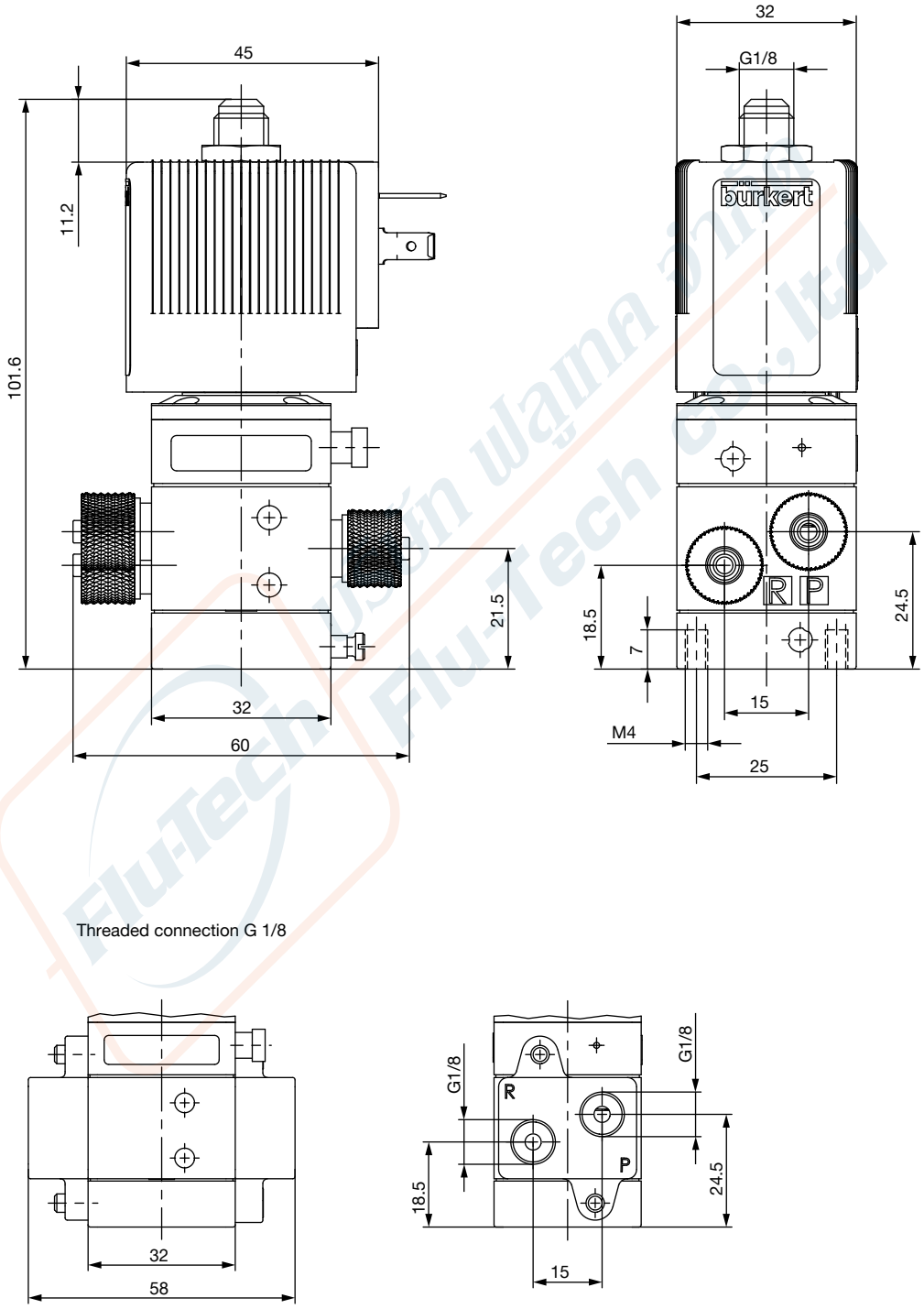

3.2. Dimension for ATEX/IECEx version

Note:
Dimensions in mm

Version with moulded cable (3 m)

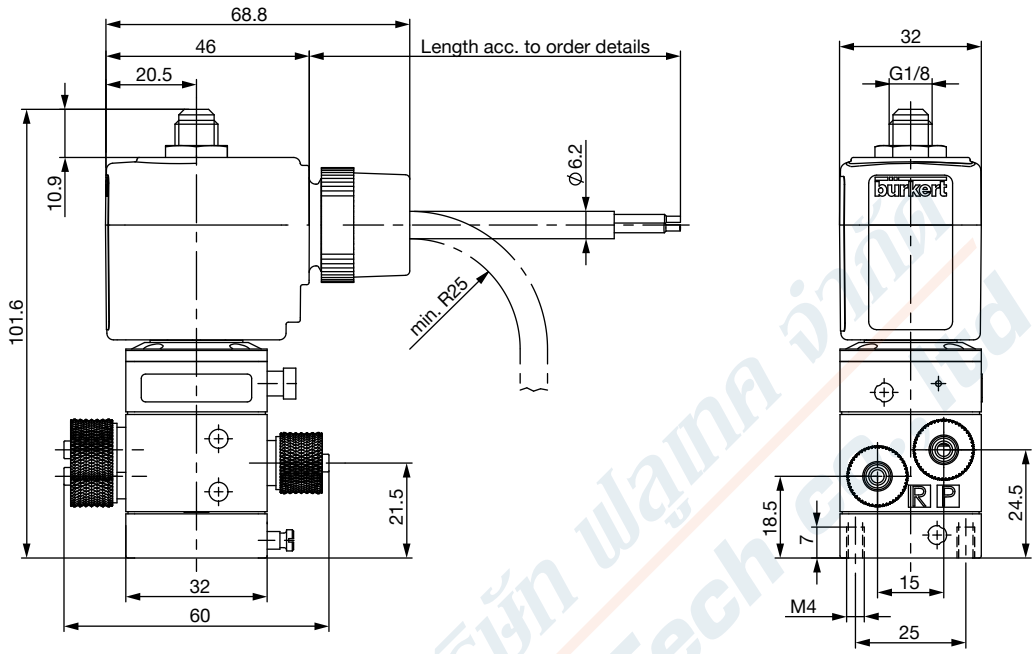

Version with junction box

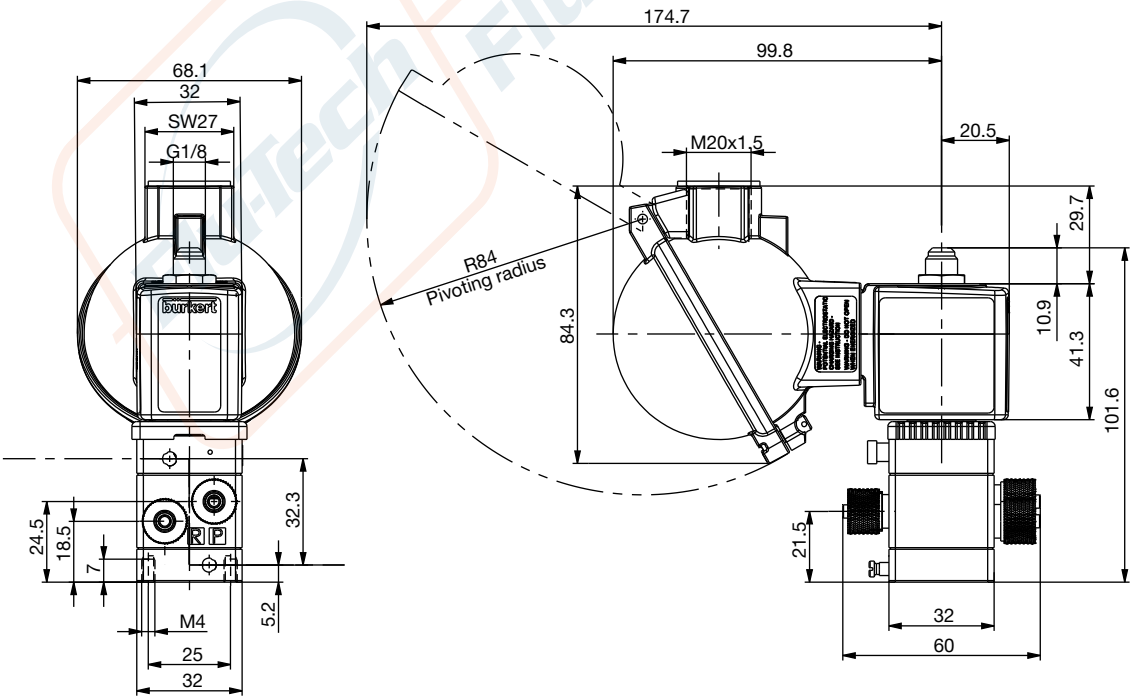

4. Product accessories

4.1. Cable glands for ATEX/IECEx terminal box

Note:

- A cable gland in polyamide version is included in the delivery. A nickel-plated brass version can be ordered at a surcharge, see "Cable glands for ATEX/IECEx terminal box" on page 10.
- This special tool is not supplied with the valve (see "Cable glands for ATEX/IECEx terminal box" on page 10)

Description	Ex approvals		Dimensions	
	Certification	Identification		
Ex cable gland, Brass, nickelplated, 6…13 mm 	PTB 04 ATEX 1112 X, IECEx PTB 13.0027X	II 2 G Ex e IIC Gb, II 2 D Ex tb IIIC Db IP68	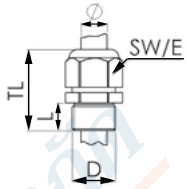	TL 29…37 mm L 6 mm D 20 mm SW 24 mm E 27 mm
Ex cable gland, Polyamide, 7…13 mm 	PTB 13 ATEX 1015 X, IECEx PTB 13.0034X	II 2 G Ex e IIC Gb, II 2 D Ex tb IIIC Db IP68	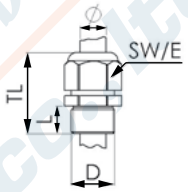	TL 36…45 mm L 10 mm D 20 mm SW 24 mm E 28 mm

4.2. Special tool to turn the junction box

Note:

- This special tool is not supplied with the valve (see "Cable glands for ATEX/IECEx terminal box" on page 10)
- This special tool can only be used with ATEX AC10 coils.

Set SC02-AC10	
	Set includes: • Special wrench • Service manual

บริษัท ฟลูเทค จำกัด
FLU - TECH CO., TD
845/3-4 หมู่ 3 ถ.เทพารักษ์ ต.เทพารักษ์ อ.เมือง จ.สมุทรปราการ 102070
845/3-4 Thepaharak RD., T. Thepharak, A. Muang, Samutprakan 10270 THAILAND
Tel. 0 2384 6060, Fax 0 2384 5701, Email : pneumatic@flutech.co.th, www.flutech.co.th